A Permanent Magnet, Rack and Pinion Gearbox for Ocean Energy Extraction

Michael Langeliers*, Emmanuel Agamloh†, Annette von Jouanne‡, Alan Wallace§
School of Electrical Engineering and Computer Science, Oregon State University, Corvallis, OR, 97331-3211

This paper describes the research, design, construction, and prototype testing of a novel permanent-magnet, rack and pinion gearbox (PMRPG) generation buoy for ocean energy extraction. This buoy captures the vertical motion of ocean waves and converts it to high speed rotary motion to drive a rotary generator. The system consists of a floor mounted structure housing the permanent magnet, rack and pinion gearbox and the generator. The translator shaft of the PMRPG is coupled to the oscillating motion of a buoy on the water's surface. The cyclic linear motion of the translator shaft is magnetically coupled to two rotors which then drive a rotary generator.

Nomenclature

PMRPG	=	Permanent-Magnet Rack and Pinion Gearbox
p_h	=	Number of pole pairs on inner (high speed) rotor
p_l	=	Number of pole pairs on outer (low speed) rotor
p_r	=	Number of pole pairs on rotor
p_s	=	Number of pole pairs on translator shaft
n_s	=	Number of pole pieces

I. Introduction

THE world's oceans present a potential source of renewable energy that has yet to be effectively tapped. An estimated 0.2% of the world's ocean energy would be enough to power the world[1]. Developing an efficient and reliable method of harnessing this energy is a critical step towards taking advantage of this clean, renewable energy source. The following paper presents a new system design for a near shore device that converts the mechanical oscillating motion of ocean waves into electrical energy through the use of a permanent-magnet, rack and pinion gearbox (PMRPG). The use of the PMRPG has significant advantages over its mechanical counterpart in that it uses contact-less force transmission. This allows for overload protection and requires no moving seals.

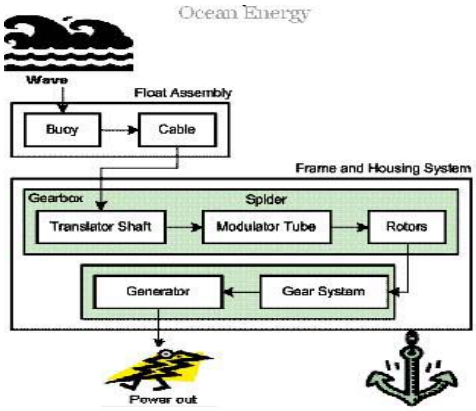

Figure 1. System Overview Block Diagram.

II. System Overview

The main criteria for this design were the requirements of any system in a marine environment; survivability, reliability, and maintainability. The system, as outlined in Fig. 1 consists of a sea-floor mounted frame and housing, tethered to a buoy to couple with the waves. Putting the actual generation device on the floor was chosen for two

* Student, Electrical Engineering and Computer Science, Owen 220
† Student, Electrical Engineering and Computer Science, Owen 220
‡ Professor, Electrical Engineering and Computer Engineering, Kelly 3027
§ Professor, Electrical Engineering and Computer Engineering, Kelly 3025

reasons. First, housing the gearbox and generator in a buoy would create the need for a specially designed buoy. Mounting on the ocean floor allowed the selection of a commercial-of-the-shelf (COTS) buoy rather than redesigning the generator housing for different buoy profiles. Second, the surface can be a violent and harsh environment. The ocean floor has its drawbacks as well but the rough and turbulent conditions at the surface can be avoided. Also the PMRPG allows for no moving seals, making sealing for submersion an easier task. Maintainability is reduced by having the system submerged, but in the proposed system the authors believed the drawback was outweighed by the benefits.

III. Gearbox System

A. Rotary Theory

The initial concept of the permanent magnet gearbox spring boarded from the work by Atallah, Caverley, and Howe[2] on rotary magnetic gears. They developed a model for a concentric gearbox which created a gear ratio by modulating the magnetic fields of the rotors.

The initial design as shown in Fig. 2, consists of an inner rotor with a number of N/S magnet pole pairs p_h, a stationary ring with a number of ferromagnetic pole pieces n_s, and an outer rotor with a number of N/S pole pairs p_l.

By itself at standstill, the inner rotor creates magnetic poles with spacing equal to its pole pitch. When the ring with pole pieces is added, the fields on the outside of the ring are altered. The pole pieces modulate the magnetic fields and create space harmonics of the fields on the outside of the ring. A new pole pitch is then created by the dominant space harmonic. When the inner rotor is then rotated at a speed ω_0, the modulated field then moves at a rate of $\omega = \omega_0 * ((n_s - p_h)/p_h)$. By choosing a pole pitch on the outer rotor that matches the pole pitch of the modulated field, the outer rotor is then coupled to that field and thus coupled to the inner rotor and a gear ratio is created. The gear ratio (from inner to outer) is then $(n_s - p_h)/p_h$ and p_l is given by $n_s - p_h$.

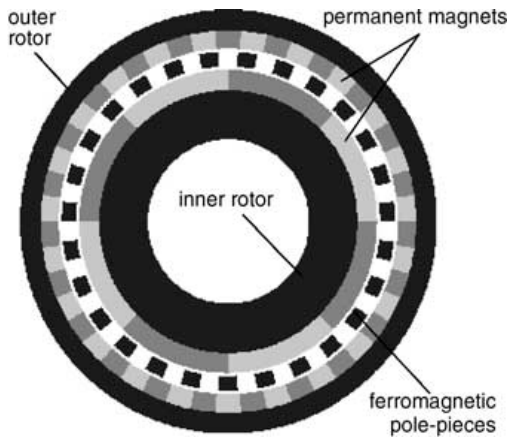

Figure 2. Concentric Gearbox

B. Rack and Pinion Transformation

The rotary design was then expanded into a rack and pinion design by "un-wrapping" the outer rotor and modulator ring into a linear design as shown in Fig. 3. So now the outer rotor is referred to as the "translator shaft" and the modulator ring is referred to as the "modulator tube."

The size ratios were chosen based on the above mentioned paper's test results giving a theoretical gear ratio of 5.75:1. The authors chose this number because it was a published result from construction in the rotary version that had the best characteristics with a minimum of cogging torque.

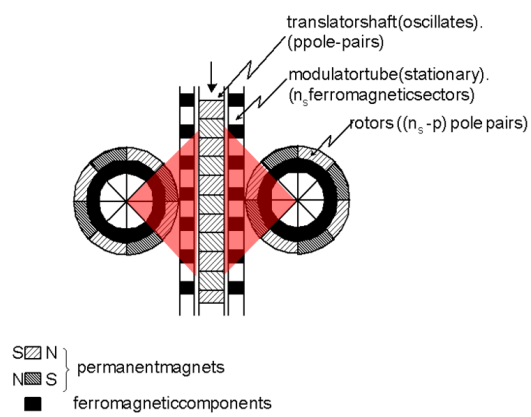

Figure 3. Rack and Pinion Design

C. Translator Shaft

The translator shaft consists of 1/4" x 1" x 2" magnets incased in an aluminum frame. The authors chose to use aluminum to keep the shaft rigid under the severe forces it will be subjected to and minimize interference with the magnetic circuit. The total shaft length is 4 ft with 3 ft of magnets and a 6 inch block on each end.

The magnets were originally stacked with alternate N-S polarity with their magnetized sides (the ¼" x 2" face) facing perpendicular to the translator shaft (See Appendix D). However, this arrangement needed to be modified as will be explained in the test results section. To return the shaft to its starting position following a positive (upward at

the buoy) stroke, a return spring of elastic rubber tubing is attached to the bottom of the shaft and secured to the frame (not shown in Appendix A).

D. Modulator Tube

As seen in Fig. 3, the area of interaction between the modulator tube and the rotors is limited to the shaded area. In order to increase the effective area of interaction, the modulator tube pole pieces have been extended out into what has become known as the "spider" configuration (Fig. 4). These legs allow for almost 360 degrees of magnetic interaction with the rotor.

Low carbon steel laminations are stacked to form the legs of the Spider in order to reduce eddy currents induced by the traveling magnetic flux. Each leg is 0.22" thick and spaced with a pitch of 0.44". These laminations are 1" wide and 0.015" thick. To fill each "spider leg" slot, 14 laminations had to be pressed into position and were subsequently secured in place with cyanoacrylate adhesive.

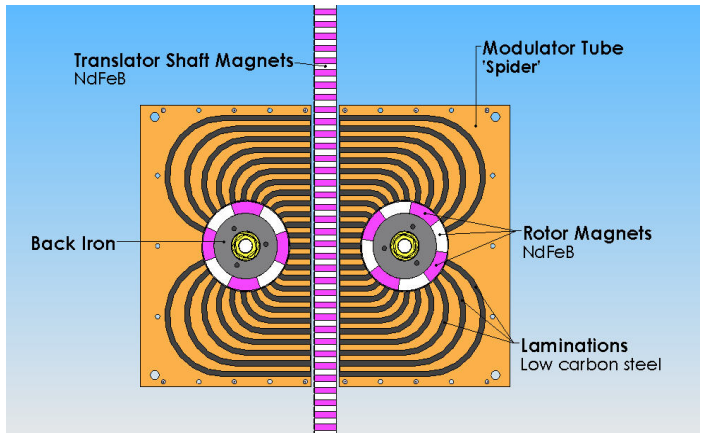

Figure 4. Arrangement of the translator shaft, "spider" and rotors

Magnetic attraction between these laminations and the rotor is significant and results in "magnetic cogging" that causes the rotors to pulse as they mate. This phenomenon occurred despite the selected gear ratio and will be discussed further during the Initial Test Results and Corrective Actions sections.

As shown in Fig. 4, the modulator system consists of two spider pieces; one on each side of the translator shaft. Each spider piece had to be constructed in halves before they were combined to become two complete spider sets. The body of the spider is PVC which was chosen for rigidity, its resistance to corrosion and for its non-magnetic properties.

E. Rotors

The rotors consist of curved magnets attached to an inner metal back iron fixed on a shaft. They have an outer circumference of 12". 4 N-S pole pairs (8 magnets total) are mounted on steel back-irons (Fig. 5). Each magnet is 2" tall and ½" thick. Torque plates are attached to the top and bottom to secure the magnets from spinning on the rotor. These plates are bonded to the magnets using cyanoacrylate adhesive and secured to the back iron via three nylon Torque Plate Screws. Bearings were press-fit onto each end of the shaft to minimize friction with the modulator tube.

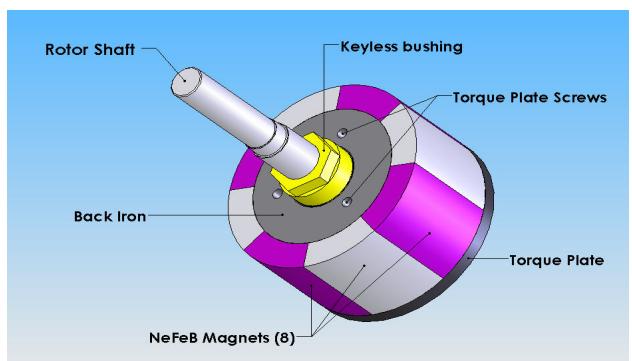

Figure 5. Rotor Construction

F. Mechanical Gearing

The expected 5.75:1 gear ratio delivered from the magnetic gearbox was chosen to deliver a shaft rotation rate in the range of 560 RPM (Appendix B). Although the rotational gears described in [2] found this to be a very good ratio, for our purpose it proved to be unworkable (because of higher leakage fluxes). Consequently, after creating a larger pole pitch in the translator shaft, the new gear ratio was 0.9:1. Hence, it was necessary to compensate for this loss in gearing by adding a mechanical gear system that would couple both rotor shafts into a single gear reduced output (Fig. 6). The gear system provides a ratio of 7:1 giving a generator shaft max RPM of 630.

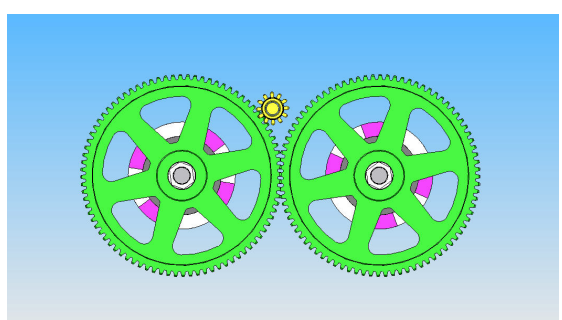

Figure 6. Mechanical Gear System

IV. Generator

Frictional resistance from the shaft and bearing systems, as well as resistance from magnetic cogging and the connected load is expected to completely stop rotor motion between the time the wave crest passes and the time the next wave begins to pull the translator shaft up again. Therefore, the time the generator spends at these maximum torque & speed regions will be brief. Transient wind-up and wind-down that involves rapidly changing torques and the associated shaft RPM will occur in a real system. A generator needs to be selected that will perform well during this transient phase of operation, as this is where it will spend the majority of its time. The generator used for the testing is a 3 phase permanent magnet motor.

V. Frame

A sturdy platform needed to be provided that would secure the system to the ocean floor and protect the gearbox from damage. The main body of the frame was fabricated by welding 1/8" angle iron. The frame shown here was designed for testing conditions in OSU's wave flume, the O.H. Hinsdale Wave Research Laboratory, wave tank and does not reflect the design or materials that would be used in the ocean environment

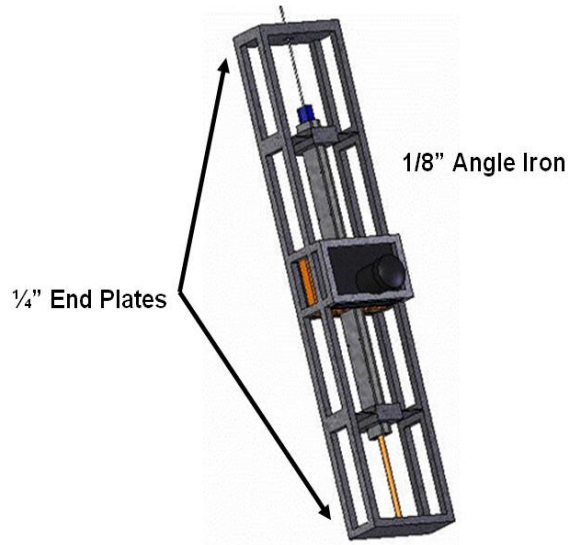

Figure 7. Frame built for testing at O.H. Hinsdale Wave Research Laboratory

VI. Testing Results

A. Initial Test Results

Following initial assembly of the gearbox, preliminary testing immediately revealed that the gearbox did not function as anticipated. Moving the translator shaft back and forth past the modulator tube did not cause rotation of the rotors as expected. Investigation of the magnetic circuits revealed the following problems:

1) The translator magnets, because of the small pole pitch, are too weak to overcome rotor cogging
2) Two spider legs removed during the design phase to simplify construction had reintroduced substantial imbalances and magnetic cogging
3) Possible incorrect pole pitch in system

B. Corrective Actions

One of the first corrective actions instituted was inserting ferromagnetic dowels in the spider system at the points where the two legs that were removed would have been. This significantly reduced cogging torques in the rotors by providing a symmetrical attraction to the surrounding metal laminations.

The next action implemented was experimentation with larger magnets in the translator shaft, revealing that changing the thickness, or pitch, of the soft iron pieces between the magnets on the translator shaft would produce a different coupling efficiency to the rotors. Testing of several magnet pitches indicated that 1 5/8" pitch produced the highest power transmission through the gearbox. However, as mentioned before, the resulting gear ration was 0.9:1.

C. Final Results

Power output analysis came from a delta connected generator connected to a balanced Y load varying from 5 ohms to 50 ohms, as indicated in the Table 2, Appendix C.

VII. Recommendations

A. Recommended Improvements for Future Designs

Although these concepts are still in the design phase, a more thorough understanding of gearbox theory and initial testing to determine magnet pitch on the translator shaft and rotors should be realized. As mentioned before, the 5.75:1 gear ration was chosen because it had been successfully built and tested in the rotary form. However, another issue in selecting a gear ratio is magnet size. The translator magnets proved to be too small to provide a strong enough interaction with the modulator tube. But to make those magnets any larger while keeping the same ratio would require making the rotor magnets even larger. A further investigation to find the optimal magnet size and gear ratio combination should be done.

B. Other Suggestions

1) Stronger Magnets (52 MGOe instead of 35 MGOe)
2) Higher Gear Ratio. 11:1 to reduce the need for mechanical gearing to achieve higher RPMs in the rotor
3) The use of lighter weight materials used in rotors (not solid iron back-irons) to reduce rotational inertia of rotors.

Appendix A: Gearbox Description

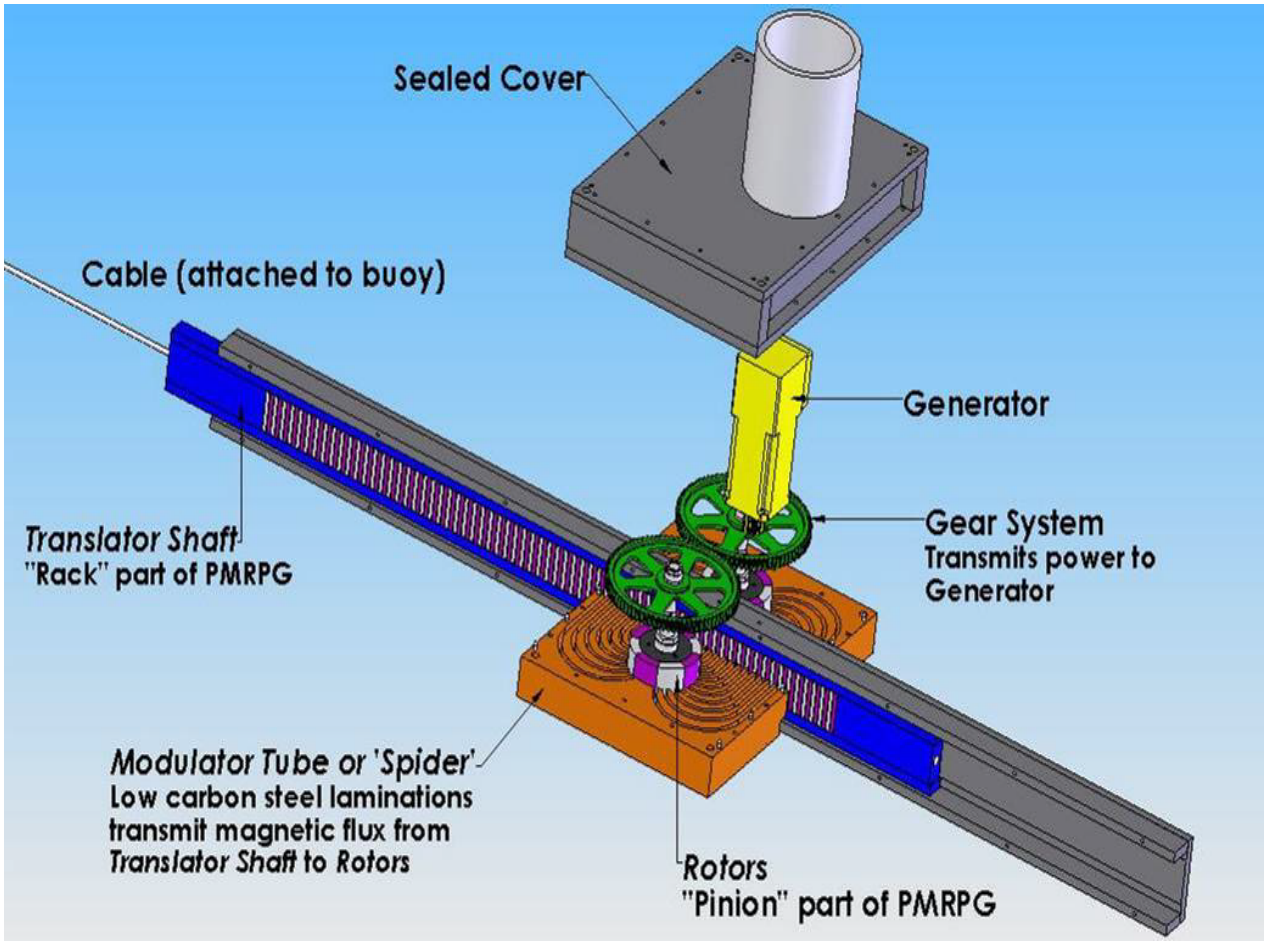

Figure 8. Gearbox Cut-Away View

Appendix B: Calculation of Rotor Speed

Peak translator shaft speed: S_{ts} = 1.625 ft/s (1/2 m/s, from O.H. Hinsdale Wave Research Laboratory)

Gear Ratio: 5.75:1 (from Reference [1])

Rotor speed (on rotor circumference): $S_r = 5.75 * S_{ts} = 9.34$ ft/s

Rotor Frequency: f_r (RPM) = Sr/Cr *(60 s/min)= (9.35ft/s)/(1ft)*(60s/min) = 560 rev/min

Appendix C: Dry Test Results

PMRPG Testing **14-May-05**

Resistance	Trial 1			Trial 2			Trial 3			Average
Ω	V	A	W	V	A	W	V	A	W	Power (W)
5	75.2	9.6	156.3	73.6	8.8	140.2	76.0	9.6	158.0	151.5
6	78.4	8.8	149.4	76.8	9.6	159.6	81.6	10.4	183.7	164.2
7	84.8	8.8	161.6	84.8	8.0	146.9	86.4	8.8	164.6	157.7
8	89.6	8.0	155.2	87.2	7.2	135.9	84.8	7.2	132.2	141.1
9	90.4	7.2	140.9	90.4	8.0	156.6	92.8	7.2	144.7	147.4
10	93.6	6.4	129.7	96.0	7.2	149.6	95.2	8.0	164.9	148.1
11	102.4	8.0	177.4	100.8	7.2	157.1	99.2	6.4	137.5	157.3
12	99.2	6.4	137.5	104.0	7.2	162.1	100.0	6.4	138.6	146.0
13	102.4	7.2	159.6	107.2	6.4	148.5	102.4	7.2	159.6	155.9
14	108.8	7.2	169.6	109.6	7.2	170.8	106.4	6.4	147.4	162.6
15	108.0	5.6	130.9	104.0	5.6	126.1	111.2	6.4	154.1	137.0
20	114.4	6.4	158.5	125.6	5.6	152.3	122.4	6.4	169.6	160.1
30	129.6	4.8	134.7	128.8	4.8	133.9	128.8	4.0	111.5	126.7
40	143.2	4.8	148.8	130.4	4.8	135.5	139.2	4.0	120.6	135.0
50	142.4	4.0	123.3	156.8	4.8	163.0	132.8	4.0	115.0	133.8

Voltages, Currents are Pk-Pk values

Appendix D: Translator Shaft Magnet Configuration

The shaft magnets were stacked in groups of four taped together in an N-N, and S-S pole configurations essentially forming one large magnet. These large magnets were placed in the shaft with their like pole faces facing each other with a soft iron piece between them. This channels the magnetic flux through the iron pieces, thus creating a stronger coupling between the translator shaft and the rotors fig. 8.

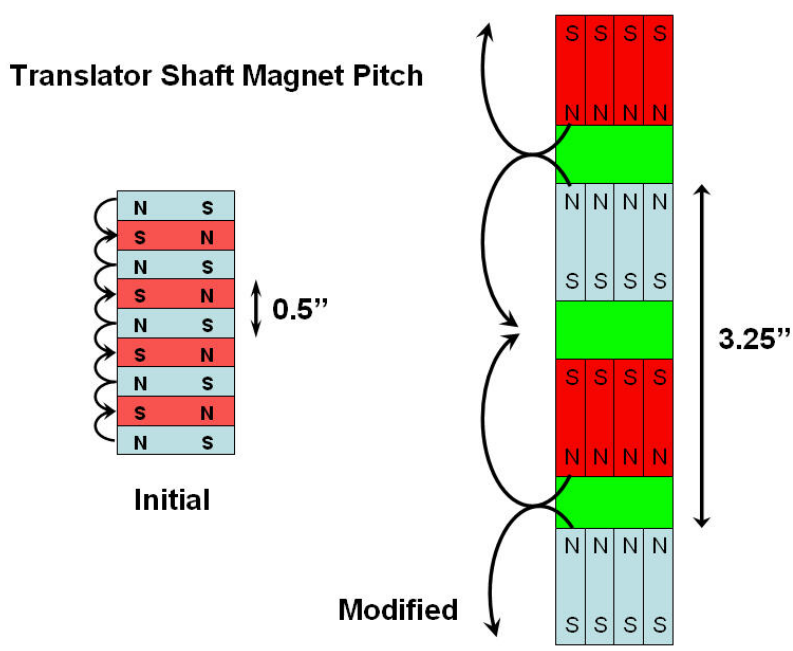

Figure 9. Translator Shaft Magnet Configuration

Acknowledgments

The authors would like to acknowledge the following:

1) A generous grant to support the work and purchase of materials and labor from the Granger Foundation
2) Material donations from Proto Laminations Inc.
3) Generator donation by the Malivor Infranor Group
4) Discounted machining by Griffo Bros..

References

[1] A. von Jouanne, A.K. Wallace, K Rhinefrank, J. Prudell, K. Kimball, J Aills, E. Schmidt, P Chan, B. Sweeny, E.B. Agamloh, T. Schacher. "Novel Ocean Energy Permanent Magnet Linear Generator Buoy". American Institute of Aeronautics and Astronautics. AIAA-2005-0399

[2] K. Atallah, S.D. Calverley and D. Howe.. "Design, analysis and realization of a high-performance magnetic gear," *IEE Proc*.-Electr. Power Appl., Vol 151, No. 2, March 2004.