A Unique Wave Energy Linear Test Bed Design and Control

Peter Hogan,[*] Ken Rhinefrank,[*] Aaron Vander Meulen,[*] Ean Amon,[*] Charles York,[*]
Al Schacher[†]
Ted K.A. Brekken,[‡] Annette von Jouanne,[§] Bob Paasch,[¶]
Oregon State University, Corvallis, OR, 97331, USA

This paper presents a unique wave energy Linear Test Bed designed to generate the relative linear motion created by ocean waves to optimize wave energy device technologies. The specifications, characteristics and control modes are discussed, in addition to an innovative force control method to enable the Linear Test Bed to emulate the hydrodynamic forces of an ocean environment. The details of the control algorithm design are presented, along with simulation results.

Nomenclature

LTB	Linear Test Bed
DUT	Device Under Test
WEC	Wave Energy Converter
F_e	Hydrodynamic excitation force, N
F_{gen}	Generator force, N
m_b	Buoy dry mass, kg
A_b	Buoy added mass, kg
c_b	Buoy hydrodynamic damping, Ns/m
k_b	Buoy hydrostatic stiffness, N/m
z_w	Water vertical position, m
z_b	Buoy vertical position, m
Subscript	
w	Water
b	Buoy

I. Introduction

OSUs multidisciplinary wave energy team is pursuing wave energy developments in four thrust areas:

1. Researching novel direct-drive wave energy generators.
2. Developing an action plan for a National Wave Energy Center in Oregon
3. Working closely with the Oregon Department of Energy (ODOE) and a variety of stakeholders to promote Oregon as the optimal location for the nations first commercial wave parks.
4. Examining the biological and ecosystem effects of wave energy generation systems.

[*]Graduate Student, Electrical Engineering and Computer Science
[†]Columbia Power Technologies (CPT)
[‡]Assistant Professor, Electrical Engineering and Computer Science, AIAA Member
[§]Professor, Electrical Engineering and Computer Science
[¶]Professor, Mechanical Engineering

OSU's wave energy team has upgraded their energy systems laboratory, The Wallace Energy Systems and Renewables Facility (WESRF), with a unique wave energy Linear Test Bed (LTB), shown in Fig. 1. The LTB will allow testing of wave energy generation devices in a dry, controlled, repeatable environment. The LTB will be programmed with actual wave data, and will apply the hydrodynamic forces corresponding to that wave data to a device under test (DUT). The DUT will heave and fall in the LTB as if the device was actually in that wave environment. This will allow very accurate and advanced testing of buoy-type wave energy converters (WECs).

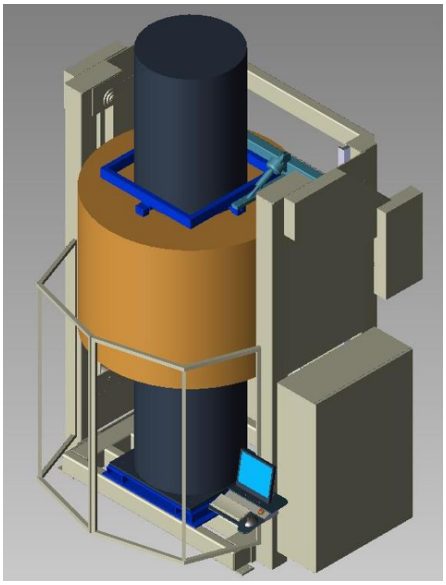

(a) CAD drawing

(b) LTB installed in WESRF

Figure 1. Linear Test Bed (LTB)

II. Wave Energy Linear Test Bed Characteristics

The LTB is designed to create the linear motion between a vertically oriented center spar and the active components of a surrounding "float," seen in Fig. 1(a) as the black and orange cylinders, respectively. The LTB will enable the dynamic and controlled testing of wave energy devices, using captured wave profiles from ocean monitoring buoys, while simulating the actual response of ocean waves. In detail, the mechanical machine oscillations in the vertical axis will simulate sinusoidal vertical velocity, predetermined velocity profiles, or dynamically controlled force interactions to simulate the actual response of the buoy in ocean waves. Simulating ocean waves requires very high forces. For this LTB system, driving forces of up to 20,000N (4500 lbs) at speeds of 1m/s are required, or 10,000N (2250 lbs) at 2 m/s, and up to 3 m/s with lighter loads. The system specifications are:

- Mimics the wave action to test wave energy devices.
- A carriage actuated by a belt and pulley system moves the float relative to the spar.
- 10kW with a 50% efficient device, and up to 19kW at 95% efficiency.
- 1 m/sec at 20,000 N Thrust (4500 lbf).
- 2 m/sec at 10,000 N Thrust (2250 lbf).
- Modes: position, velocity, and force control (through feedback from load cells/force meters).
- 2 meter relative motion/stroke (6.5 feet).
- Upper and lower gimbal mounting (for alignment variation).

- 14 ft tall x 10.5 ft wide x 8.5 ft deep.

The LTB system will be comprised of one (1) vertical axis (Z) of servo controlled CNC (computer numerically controlled) motion for moving the wave energy Device Under Test (DUT). A servomotor, through timing belts, will be used to move the LTB carriage to drive the active float up and down. The float will be attached through dual load cells to the driving arm of the LTB, with servo loop integration. Linear bearings will provide guidance for the carriage. The base has a gimbal mounting for the center spar and a removable pallet for loading and unloading the DUT. An upper gimbal mount will be used to attach the top of the DUT to the carriage. (Note, the active float of the buoy is mounted with a gimbal mount to tolerate dimensional and alignment variation of the DUT). Three sizes of carriage yokes will be used for different size wave energy devices. A versatile PC-based Delta Tau motion controller will be used to provide closed-loop position control. A Graphical User Interface (GUI) will provide access for setup, motion profiles and overall operation of the machine. Load cell calculations, test data storage, and force control for dynamic buoy testing will be executed by a separate dSPACE system.

III. Linear Test Bed Position Control Modes

The Linear Test Bed has several control modes.

- **Data file input**
  A data file specifying position vs. time is given to the Delta Tau motion control system through the GUI. The file can be generated with Matlab. The time between points can be as small as 1 ms.

- **Point to point**
  Two position points are specified through the GUI, as well as velocity constraints. This allows the device to cycle up and down between two points following a trapezoidal or triangular velocity profile.

- **Dynamic force control**
  The Delta Tau motion control system accepts an externally supplied position command via an analog to digital converter. +10 V corresponds to +1 m and -10 V corresponds to -1 m. This allows an external system to provide the position command. The external system can be as simple as a potentiometer. In this paper, the external system is dSPACE, which using this external input to run a sophisticated hydrodynamic force control. This control mode is discussed in detail.

In addition, there is a jog mode for loading, unloading, and adjusting devices under test.

IV. Force Control

Using the Linear Test Bed to move a DUT with a position function (e.g. sinusoidal) is useful for testing basic operation. However, in order to fully test the DUT and its control system, the Linear Test Bed must supply the hydrodynamic forces that the device would see in the water. The LTB must have a force control mode that can emulate hydrodynamic forces.

IV.A. Force Provided by the LTB

Using linear wave theory (Morison model[1]), the hydrodynamic force F_e on a cylindrical buoy along the vertical axis (z axis) can be calculated from the wave profile.

$$F_e = A_b \ddot{z}_w + c_b \dot{z}_w + k_b z_w \tag{1}$$

where z_w is the vertical position of the water surface at the buoy, A_b is the added mass, c_b is the linear damping coefficient, k_b is the hydrostatic stiffness, and F_e is the excitation force.

The hydrodynamic force F_e and the generator force F_{gen} act upon the mechanical system.

$$F_e + F_{gen} = (m_b + A_b)\, \ddot{z}_b + c_b \dot{z}_b + k_b z_b \tag{2}$$

where m_b is the dry mass of the buoy and z_b is the buoy vertical position in the z-axis. Equation (2) describes the system in the ocean. For proper emulation of the ocean environment in a laboratory, the LTB must

supply the excitation force F_e and the other hydrodynamic terms.

$$F_{LTB} = F_e - A_b\ddot{z}_b - c_b\dot{z}_b - k_b z_b = A_b\ddot{z}_{wb} + c_b\dot{z}_{wb} + k_b z_{wb} \tag{3}$$

Where $z_{wb} = z_w - z_b$.

The result of this will be a force controlled system where the commanded force is updated on the fly based on the position, velocity, and acceleration of both the WEC and the wave profile. A general block diagram of this control scheme is shown below as Fig. 2. A force command is generated using the position

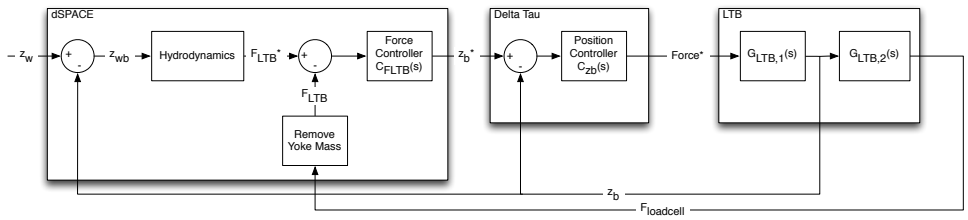

Figure 2. System block diagram.

of the WEC under test in the linear test bed and the wave height. The hydrodynamics block in Fig. 2 is the implementation of Eq. (3). This force command is compared to the actual force being applied by the Linear Test Bed as measured by the load cells. Any error is then fed into the force controller and converted to a position command, which is fed into the Delta Tau PMAC controller. Next, any error in the commanded position and actual position is fed into the PMAC PID position controller and outputs a control signal to the motor drive. The signal is a motor torque command, which causes the motor torque to change, resulting in new carriage acceleration. This new linear acceleration value will drive the position error to zero.

There is an additional issue regarding the yoke mass. The load cells on the LTB that measure force are located on the yoke that attaches to the device under test. The load cells are located "behind" the yoke mass, such that the load cells measure the inertial force of this mass when accelerating. To measure the true force applied to the device under tested by the LTB, this inertial force must be subtracted off of the load cell force.

$$F_{LTB} = F_{loadcell} - \ddot{z}_b m_{yoke} \tag{4}$$

IV.B. Force Control Design

IV.B.1. Estimating the Delta Tau Position Control Loop

In order to accurately simulate the force controller (dSPACE), it is important to understand how it will interact with the inner loop position controller (Delta Tau). In order to do this an accurate model of the Delta Tau controller must be generated in Simulink before any force control work is completed. The purpose of the position controller is to ensure the actual linear position of the WEC under test in the Linear Test Bed carriage, z_b, is as close as possible to the commanded position, z_b^*. The Delta Tau has a PID control structure so it must be modeled as such. The transfer function is shown in Eq. (5). A pole is used in the differentiator term to limit the high-frequency gain.

$$C_{z_b}(s) = k_p + k_i/s + k_d\frac{s}{sT_d + 1} \tag{5}$$

Before we can start to understand the design of the controller, we must establish the plant $G_{LTB,1}(s)$. This is simply the relationship between force applied and position for a unit mass.

$$G_{LTB,1}(s) = 1/s^2 \tag{6}$$

The model of the Delta Tau controller will only be an approximation and the true response of the system will not be known until the Linear Test Bed is built and installed in the Wallace Energy Systems and Renewables Facility. The approximation of the response of the controller is based on the sampling rate of the Delta Tau (442 microseconds). From this, the designers can estimate a crossover frequency of the Delta Tau. One rule of thumb is if there is a sine wave input to the controller, it is necessary to have at least 10 samples per period to accurately reproduce this sine wave. For a sampling frequency of near 2kHz (about 442 μs), it would be

possible to track signals at 200 Hz, or about a tenth of 2 kHz. Therefore the crossover frequency for the position loop should be placed at approximately 200 Hz. The design criterion was a controller that crossed over at 1250 rad/s, had a phase margin of at least 60 degrees and a gain margin of -30 dB. Using Eq. (6) as a plant function assuming the mass is included in the controller gain, the controller transfer function that satisfied the design criterion is

$$C_{z_b}(s) = \frac{1267s^2 + 111650s + 2.06\text{e}6}{2.3\text{e-}5s^2 + s}. \tag{7}$$

Consider the general transfer function for a PID controller described above in Eq. (5). After substituting for Eq. (7), $k_i = 2.06 \cdot 10^6$, $T_d = 2.3\text{e-}5$, $k_p = 1.1160\text{e}5$, and $k_p = 1.2644\text{e}3$. The position loop closed-loop transfer function is

$$\frac{z_b}{z_b^*}(s) = \frac{C_{z_b}(s)G_{LTB}(s)}{C_{z_b}(s)G_{LTB}(s) + 1} = \frac{0.02914s^3 + 1270s^2 + 1.117\text{e}5s + 2.03\text{e}6}{5.3\text{e-}10s^5 + 4.6\text{e-}5s^4 + 1.03s^3 + 1270s^2 + 1.12\text{e}5s + 2.03\text{e}6}. \tag{8}$$

Implementation of the Delta Tau PID controller and the LTB plant is shown in Fig. 3. Anti-windup control is used to limit the output of the integrator and a saturation block is used to limit the position command to the limits of the linear test bed.

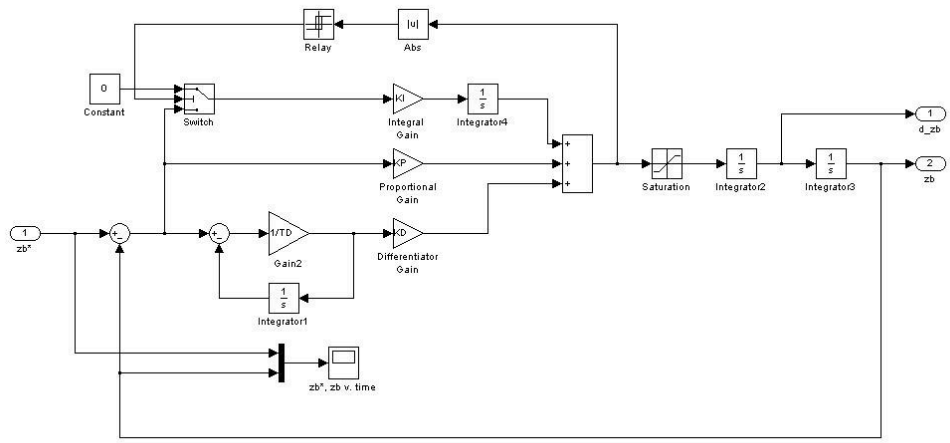

Figure 3. Simulink modeling of the Delta Tau and the LTB combined.

IV.B.2. Designing the Force Controller

Now that the relationship between commanded linear position and actual linear position is known it is only necessary to find the relationship between actual position and force applied by the Linear Test Bed. Since we assume the generator force is zero, the force applied by the linear test bed to the system under test, F_{LTB}, is used only to accelerate the device under test. The force on the device under test is simply the mass of the device under test multiplied by linear acceleration. This leads to the transfer function in Eq. (9). To design the force controller $C_{FLTB}(s)$, we must find the plant transfer function relating commanded position z_b^* to the force applied F_{LTB}. This is Eq. (10).

$$\frac{F_{LTB}}{z_b}(s) = \frac{m_b s^2}{(sT_d + 1)^2} \tag{9}$$

$$G_{FLTB}(s) = \frac{z_b}{z_b^*}(s) \cdot \frac{F_{LTB}}{z_b}(s) \tag{10}$$

$$G_{FLTB}(s) = \frac{38.96s^3 + 1.697\text{e}6s^2 + 1.493\text{e}8s + 2.714\text{e}9}{1.3\text{e-}15s^7 + 1.2\text{e-}10s^6 + 2.8\text{e-}6s^5 + 0.007s^4 + 5.4s^3 + 1630s^2 + 1.2\text{e}5s + 2.03\text{e}6} \tag{11}$$

Using a cascade approach to the control design, the inner loops are assumed to be sufficiently fast such that their apparent gain over the frequencies of operation for the outer loop is 1.

$$\frac{z_b}{z_b^*}(s) \approx 1 \text{ for frequencies less than the -3dB frequency of } \frac{z_b}{z_b^*}(s) \tag{12}$$

Therefore, for the design of $C_{FLTB}(s)$, the plant transfer function will be

$$G_{FLTB}(s) \approx \frac{m_b s^2}{(sT_d + 1)^2} \tag{13}$$

Based the hydrodynamic model, the force controller must be able to track sinusoidal force inputs in the frequency range of 0.6-1.0 radians per second. These are typical wave frequencies. To track these frequencies well, a good rule of thumb would be to design the controller to crossover at ten times this range. Thus, the design specification for the force control is a crossover frequency of 6 radians per second. Additionally, the controller must have a phase margin of at least 60 degrees with as much gain margin as possible.

From intuition it seems reasonable that three integrators could be a decent start to designing this controller. Two are needed to compensate for the differentiation needed to compute the force in the plant function, and an additional integrator for integrator action. After some experimentation with the addition of the integrators and the gain, the controller was able to achieve the required gain margin and phase margin. The force controller's transfer function is shown in Eq. (14).

$$C_{FLTB}(s) = \frac{0.00451}{s^3} \tag{14}$$

V. Simulation

V.A. Modeling

The entire system is modeled using Matlab/Simulink, shown in Fig. 4.

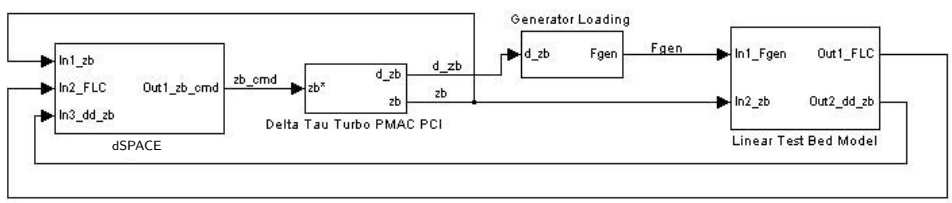

Figure 4. Simulink top level modeling of the system.

- The dSPACE block models Eqs. (3), (14), and (4).
- The Delta Tau block models Eq. (5).
- The generator loading is modeled as simply providing a force F_{gen} proportional to velocity, $F_{gen} = c_{gen}\dot{z}_b$, where c_{gen} is a constant with units N/(m/s).
- The Linear Test Bed block models the sum of the forces equal to acceleration of the buoy (device under test), $F_{gen} + F_{LTB} = m_b\ddot{z}_b$.

Theoretical parameters for a 1 kW wave energy generating buoy are used for the generator loading and hydrodynamic parameters.

V.B. Simulation Results

The first simulation case is for a buoy floating in equilibrium and a step change in the water level, Fig. 5. We would expect the buoy to rise to the new water level and ring about its new equilibrium point. The result shows exactly what is expected. It may be noted that the result appears underdamped. This is a limitation of using a linear model for hydrodynamics.

The second simulation condition is for a sinusoidal monochromatic ocean wave with a 0.75 m amplitude and a 6 second period. The result is shown in Fig. 6(a). The buoy tracks the ocean wave quite closely. This is not necessarily the desired condition. The phase shift and amplitude of the buoy position with respect to the exciting wave is dependent on the mass, added mass, damping, and stiffness of the buoy, and the

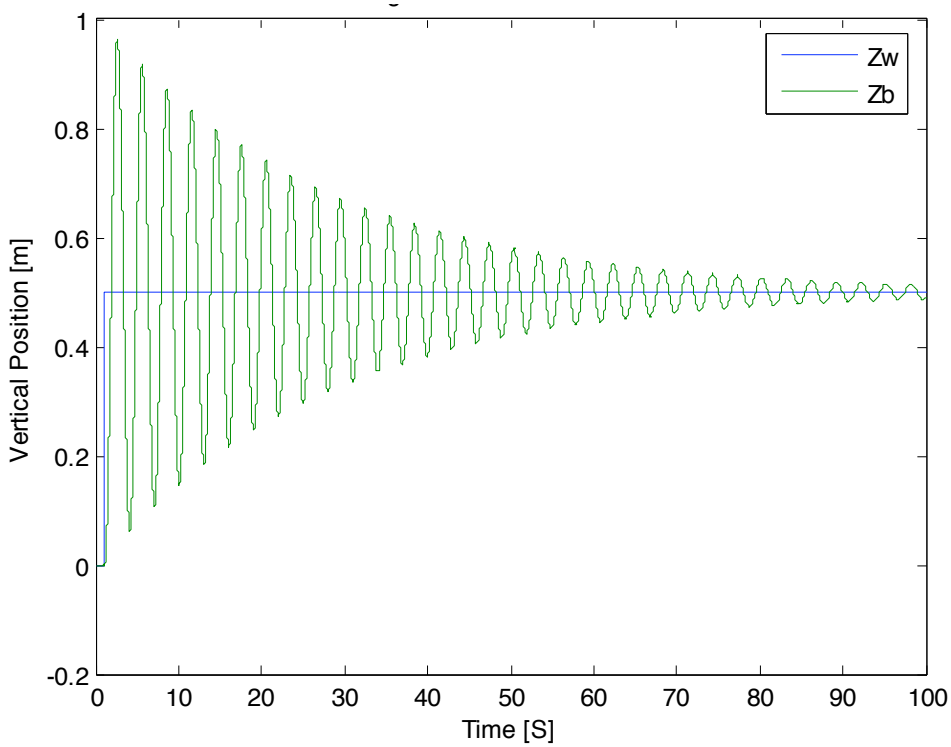

Figure 5. Step response.

frequency of the exciting wave. A system larger and heavier than the 1 kW device used in the simulation would likely show more phase shift with respect to the exciting wave.

Next we examine the performance of the controllers. Figure 6(b) shows the Delta Tau inside position loop and Fig. 6(c) shows the dSPACE force control loop. Both are working very well.

Figure 6(d) shows the forces in the system. F_{DUT} is defined as the sum of forces on the device under test in the Linear Test Bed, the Linear Test Bed applied force and the force from the generator on the device under test, $F_{DUT} = F_{LTB} + F_{gen}$.

The simulation results show that the Linear Test Bed, given a wave profile input, can emulate the hydrodynamic forces that a wave energy converter would see in an ocean environment due to that wave.

VI. Conclusion and Future Work

A novel control system for a wave energy Linear Test Bed has been presented. The control system uses two professional control platforms, Delta Tau and dSPACE, to provide both position control and force control. The force control system is designed such that the Linear Test Bed can model the hydrodynamic forces that a wave energy device would see in the ocean environment using real world wave data.

The Linear Test Bed has been installed in OSU's Energy Systems laboratory and is undergoing final installation and optimization steps. Full testing of the Linear Test Bed and OSU's 1 kW wave energy buoy will be done in January, 2008.

Acknowledgements

The authors would like to acknowledge the support of the Bonneville Power Administration (BPA), Columbia Power Technologies (CPT), the US Navy, the US Department of Energy, Central Lincoln PUD, Portland Gas and Electric (PGE), and PacifiCorp.

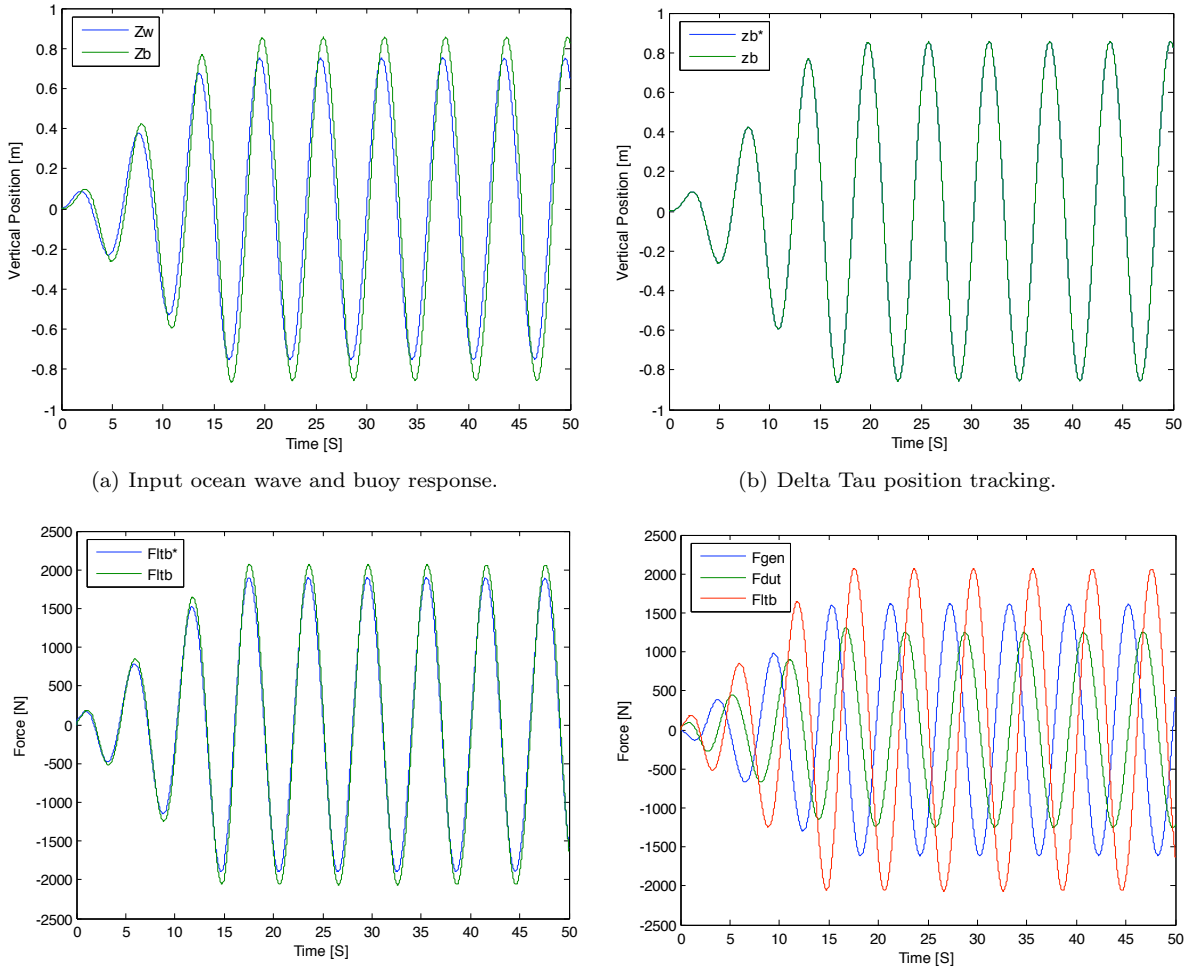

(a) Input ocean wave and buoy response.

(b) Delta Tau position tracking.

(c) dSPACE Linear Test Bed force tracking.

(d) Forces.

Figure 6. Simulation results.

References

[1]Minoo H. Patel, "Application to Floating Bodies," in *Dynamics of Offshore Structures*, Butterworth & Co. Ltd., pp. 283-286, 1980.