Proceedings of the ASME 2009 28th International Conference on Ocean, Offshore and Arctic Engineering
OMAE2009
May 31 - June 5, 2009, Honolulu, Hawaii, USA

OMAE2009-79146

NUMERICAL MODELING AND OCEAN TESTING OF A DIRECT-DRIVE WAVE ENERGY DEVICE UTILIZING A PERMANENT MAGNET LINEAR GENERATOR FOR POWER TAKE-OFF

David Elwood
HDR|DTA
5825 221st Place SE, Suite 202
Issaquah, WA 98027

Al Schacher, Ken Rhinefrank, Joe Prudell
Columbia Power Technologies, LLC
236 East High Street
Charlottesville, VA 22902

Solomon Yim
School of Civil and Construction Engineering
Oregon State University
Corvallis, Oregon 97331

Ean Amon, Ted Brekken, Annette von Jouanne
School of Electrical Engineering and Computer Science
Oregon State University
Corvallis, Oregon 97331

ABSTRACT
For the past several years an inter-disciplinary research group at Oregon State University (OSU), working in conjunction with Columbia Power Technologies (CPT) has been researching innovative direct-drive wave energy systems. These systems simplify the conversion of wave energy into electricity by eliminating intermediate energy conversion processes. In support of this research OSU and CPT have developed a hybrid numerical/physical modeling approach utilizing a large scale linear test bed (LTB), and a commercial coupled analysis tool. This paper will present an overview of this modeling approach and its application to the design of a 10kW prototype wave energy conversion system that was tested in the open ocean in the fall of 2008. The data gathered during ocean testing was used to calibrate the numerical model of the device and predict the energy capture potential of the system.

1.0 INTRODUCTION
CPT and OSU's direct-drive research focuses on a simplification of processes, i.e., replacing systems employing intermediate hydraulics or pneumatics with direct-drive approaches, to allow generators to respond directly to the movement of the ocean.

Many of the existing commercial-scale wave energy devices, being built and tested today, use additional stages of energy conversion in order to capture the ocean's mechanical energy (OPT 2008, Pelamis 2008). These intermediate conversion stages, such as hydraulics or pneumatics are used because of their maturity and availability. These systems can be integrated using off-the-shelf components, resulting in reduced development time and component cost. The disadvantage of using these intermediate conversion stages is their inherent inefficiency and maintenance requirements. A significant portion of the energy that is captured by a wave energy converter is lost transferring the mechanical energy to an electrical generator. Additionally hydraulic and pneumatic systems require frequent maintenance to perform efficiently.

The term "direct-drive" describes the direct coupling of a device's velocity and force to the generator using either magnetic fields for contact-less force transmission (flux-linkage), or a direct mechanical linkage. Some designs accomplish this using a linear electric generator (Mueller 2002, Rhinefrank 2006) while others use linear-to-rotary mechanisms (Agamloh 2008). These linear-to-rotary mechanisms benefit from increased relative motion and the utilization of off-the-shelf rotary electric generators.

In 2007 researchers at the Wallace Energy Systems and Renewables Facility (WESRF) developed a direct-drive wave energy converter (the SeaBeavI) that was tested in the open ocean off Newport, OR (Elwood J. Renewable, Prudell 2007). The SeaBeavI incorporated a dual-body floating system using a contact-less force transmission system coupled to a linear generator for power take-off. Following ocean testing, the electro-magnetic damping of the linear generator was characterized using the WESRF's linear test bed (Elwood OMAE) (see Figure 1).

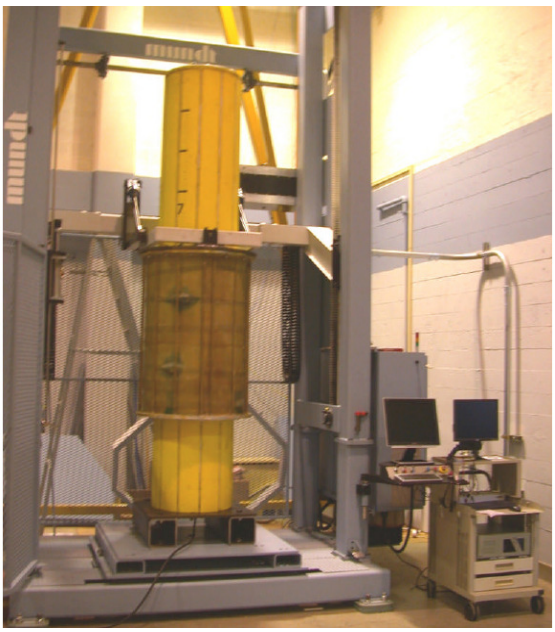

Figure 1 **Linear generator developed for the SeaBeavI prototype being tested on OSU's linear test bed (LTB)**

For their next generation prototype OSU and CPT evaluated 18 direct-drive technologies, selecting five promising concepts for further study. The most attractive designs included variations of linear to rotary mechanisms and linear generators. A 200W prototype of each system was built and tested on the LTB. In addition a numerical model of each device was developed using Matlab Simulink and coupled to OrcaFlex to determine the energy production potential of each device at 100kW scale.

Each of the designs were comprehensively simulated and then scaled up to 100kW, including full 100kW designs with costs, maintenance, operations etc., to give estimates for total costs of energy for each. Based on this work it was determined that an enhanced permanent magnet linear generator would be developed for further ocean testing. As a result, a new 10kW prototype buoy, the L-10, was designed and built using the permanent magnet synchronous linear generator from SeaBeavI for the power take-off.

This paper will focus on the numerical modeling of this dual-body point absorber wave energy conversion system utilizing a permanent magnet linear generator for power take-off. A coupled model of the system has been developed in OrcaFlex and validated through testing on the linear test bed. Results of the numerical model have been compared with 6-DOF motion and mooring tension data collected during the ocean testing of the L-10 in October of 2008.

2.0 SYSTEM CONFIGURATION

The L-10 wave energy conversion system consists of a deep draft spar and a tarus-shaped buoy having a saucer-shaped profile. The outer buoy is free to heave relative to the spar but is constrained in all other degrees of freedom by a linear bearing system. Wave forces are transferred from the buoy to the spar using a contact-less force transmission system. The wave forces imposed on the spar along with the relative velocity between the two floating bodies is converted into electricity by a permanent magnet linear generator. A schematic of the L-10 wave energy conversion system can be seen in Figure 2.

The spar was designed to provide sufficient positive buoyancy to resist the generator force in the down direction while maintaining positive hydrostatic stability.

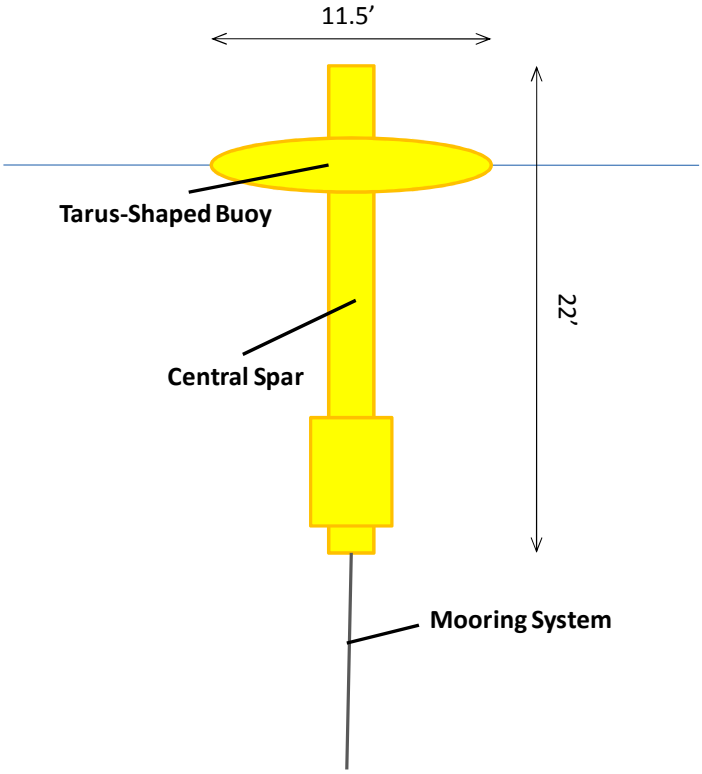

Figure 2 **Schematic of the L-10 Wave Energy Conversion System**

3.0 NUMERICAL MODELING

3.1 ORCAFLEX MODEL

Copyright © 2009 by ASME

OrcaFlex is a coupled analysis numerical tool designed to model the dynamics of offshore structures. The tool has a range of capabilities from the modeling of mooring and riser systems to analysis of towed bodies and marine renewable energy systems. The coupled modeling technique used by OrcaFlex combines a finite element model of the flexible mooring and riser components with a rigid body representation of a floating system (Orcina Ltd. 2007). Hydrodynamic forces on the floating system and lines are calculated using a Morison model approach. Multiple floating bodies can be linked together using both linear and non-linear springs and dampers.

To calculate the response of the dynamic system, OrcaFlex solves the following equation of motion in the time domain (Orcina Ltd. 2007):

$$M(d,a) + C(d,v) + K(d) = F(d,v,t) \qquad (1)$$

where

M(d,a) is the inertial load
C(d,v) is the damping load
K(d) is the system stiffness
F(d,v,t) is the external load
d, v, and a are the displacement, velocity, and acceleration vectors
t is the simulation time

Details on the hydrodynamic and mooring model created in OrcaFlex have been described in detail in previous papers (Elwood J. OMAE, Accepted).

The added mass and damping coefficients for the spar were based on experimental results (Chung 1993). Chung conducted a series of experiments to measure the heave added mass and damping of a surface piercing cylindrical buoy with a cylindrical base over a range of draft to diameter ratios.

The added mass and damping coefficients for the buoy were based on the numerical results for a heaving circular cylinder in finite water depth (Bhatta 2007).The top of the circular footing of the spar was assumed to act like a false bottom and the distance between the bottom of the buoy and the top of the circular footing was taken as the water depth.

This method assumes that the radiation and diffraction of the tarus shaped buoy heaving above a circular footing is equivalent to a buoy heaving with a water depth equal to the spacing between the footing and the bottom of the buoy.

3.2 POWER TAKE-OFF MODEL

To model the forces applied to the system by the linear generator, a linear damper was used to connect the spar and buoy in OrcaFlex. The damper exerts a force on the spar proportional to the relative velocity between the two floating bodies using the damping coefficients measured during the testing of the SeaBeavI linear generator. By using a linear damper, the generator model in OrcaFlex represents the generator running with a fixed resistive load. The generator was also modeled with various current and voltage controls using a non-linear damper. The damper used to model the linear generator can be seen in Figure 5.

An extensive electromagnetic time-domain model of the generator was built using Matlab/Simulink. The generator is modeled in the three-phase stationary reference frame. The model fully accounts for second order effects such as cogging torque and armature reaction, and also accounts for friction between the magnet section and armature. The model input is a float position time series. The model outputs are voltages, currents, and power. The model can be coupled with OrcaFlex by importing float position data determined with OrcaFlex and verifying that generator force corresponds with the generator force used in OrcaFlex. As can be seen in Figure 3 the Simulink model compares very well with measured results from the LTB.

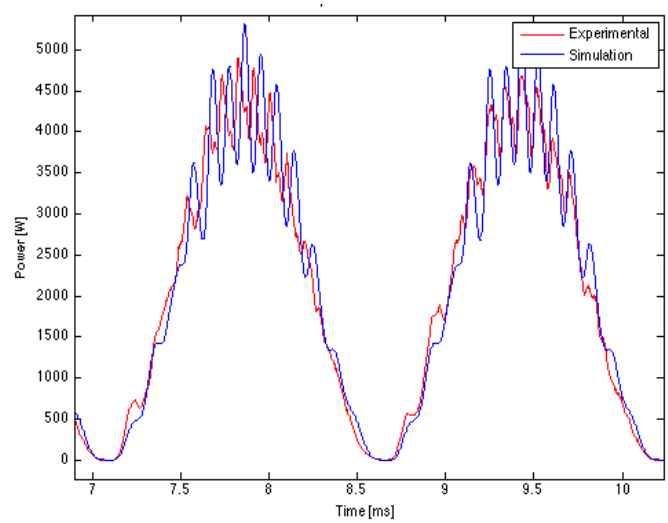

Figure 3 **Comparison between modeled and measured generator power**

3.3 CONTACT/FRICTION MODEL

The contact forces and friction between the spar and the buoy were modeled using four linear springs and a non-linear damper. Four linear springs were used to model the horizontal contact force between the bearing strips on the buoy and the spar.

Two springs at the top of the buoy provided restraint in the x and y-directions with two similar springs at the bottom of the buoy. The springs were made to be very long and very stiff in order to provide horizontal restoring force without introducing any vertical forces. The springs used to model the contact force between the buoy and the spar can be seen in Figure 4.

Copyright © 2009 by ASME

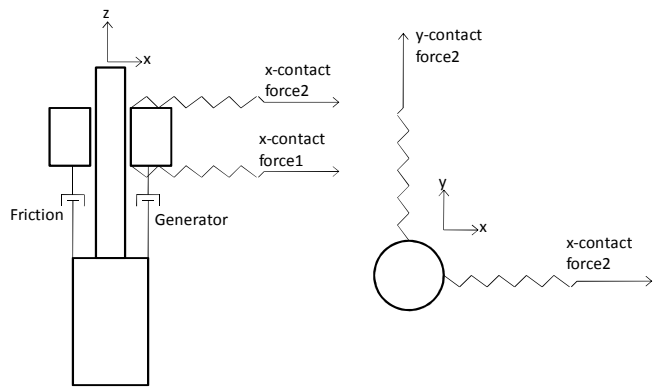

Figure 4 **Springs and Dampers used to model the contact forces, friction, and generator force between the buoy and the spar**

4.0 OCEAN TESTING

Based on the design developed by CPT and OSU, a prototype device was constructed by PlastiFab Inc., a composite fabricator located in Tualatin, Oregon. The buoy was constructed of closed cell foam with an FRP skin. The spar sections were constructed of solid fiberglass using a filament winding process.

In September of 2008, the completed prototype was tested first in Yaquina Bay off the pier at OSU's Hatfield Marine Science Center in Newport, Oregon. After successful stability and tow tests in the bay the device was towed, using the RV Pacific Storm, to the open ocean 2 miles north of Newport, 1.5 miles west of Agate Beach, just southwest of Yaquina Head. The towing configuration can be seen in Figure 5 Once on station the device was tested continuously over five days in a range of operating conditions.

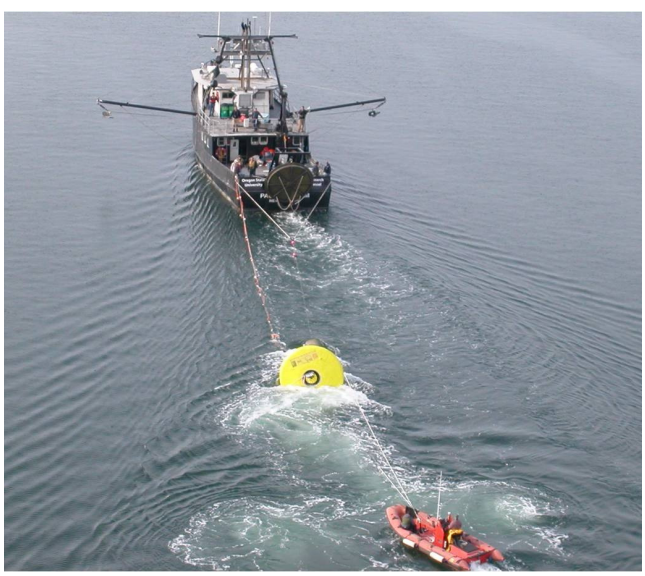

Figure 5 **The L10 Buoy Being Towed from Yaquina Bay into the Open Ocean by the RV Pacific Storm**

4.1 DATA AQUISITION

A motion sensor was used to measure the surge, sway, heave, roll, pitch, and yaw of the spar incorporating a triaxial magnetometer, accelerometer and gyroscope. Two magneto-strictive linear position sensors were used to measure the relative motion between the spar and buoy. Wireless communication between the L-10 and the R/V Pacific Storm allowed continuous monitoring of the motion sensor, buoy/spar relative position, spar temperature, battery bus voltages, spar air pressure, and remote control of the on-board control relays via a real-time controller and shipboard computers.

To measure the site specific wave climate during testing of the L-10 wave energy buoy, an acoustic wave and current sensor (AWAC) manufactured by Nortek was deployed near the test site. The AWAC is a bottom mounted Acoustic Doppler Velocimeter (ADV) that utilizes three ADV beams to measure the current velocities and a fourth beam to measure the sea surface elevation. The data from the AWAC was used as an input to the coupled model in OrcaFlex to provide a comparison between the numerical predictions and the measured motions and forces.

Figure 6 **The L10 Buoy on Station at the Test Site Southwest of Yaquina Head**

Generator loading was provided by a 30kW Power Analysis and Data Acquisition (PADA) system, designed and built for the testing of small-scale wave energy devices. This system consists of a three-phase boost rectifier front-end which can accept three-phase AC, single-phase AC, and DC inputs. This front-end is connected through a common DC bus to a DC-DC buck converter which controls dissipation of the generated power into a fixed resistive load. The cable running from the L10 to the PADA on the Pacific Storm can be seen in Figure 6.

The system employs varistors for over-voltage protection, fuses for over-current protection, and controllable mechanical relays for remotely connecting the device under test to the PADA system. LEM voltage transducers provide input voltage and DC bus voltage measurement, while current measurements are

Copyright © 2009 by ASME

provided by current transducers at the input to the three-phase front end and at the output of the DC-DC buck converter.

4.2 CONTROL MODES

The PADA was used to control the current drawn from the generator to simulate various generator control schemes. For the constant duty ratio control, the buck converter is run at a constant duty ratio. The resultant control effect is equivalent to connecting a resistive load across the DC link inversely proportional to the square of the duty ratio. This control scheme produces a current proportional to voltage, providing a velocity dependant damping force between the spar and buoy.

With constant current control, the buck converter duty ratio is controlled via a feedback controller that attempts to maintain constant amplitude current from the generator. If the force is small, the duty ratio is large, and current is drawn from the generator in spite of the low force input. If the input force is large, the duty ratio is decreased to keep the current amplitude constant. This control schemes provides a constant force between the spar and buoy. The third control scheme used was a maximum power point tracking algorithm.

5.0 RESULTS

The data collected during the ocean testing of the L-10 was used to calibrate the hydrodynamic and mooring models in OrcaFlex. Sea surface elevations gathered by the AWAC were used to drive the coupled model in OrcaFlex and the numerical results were compared with the measured data in the frequency domain. The heave added mass and damping of the buoy and spar, along with the mooring stiffness, were then calibrated based on the spectral analysis. Once the model had been calibrated the OrcaFlex model was coupled with a Simulink model of the linear generator. This coupled electro-mechanical and hydrodynamic model allowed CPT engineers and OSU researchers to estimate the annual energy production potential of the device based on measured wave spectra.

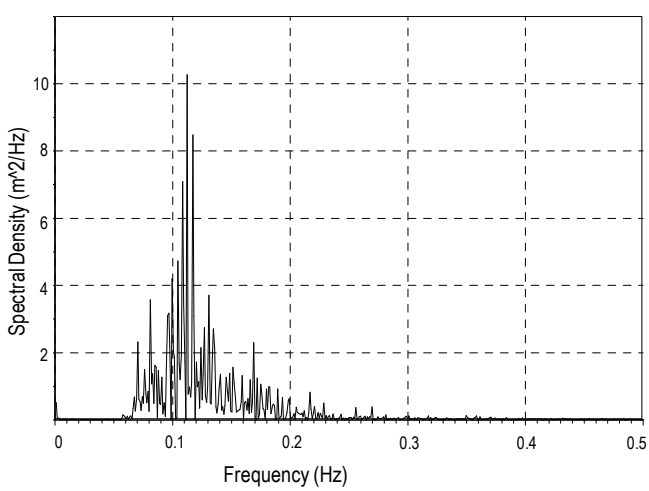

Figure 7 **Measured Wave Spectrum used as Input to OrcaFlex**

Data collected during the ocean testing was over-sampled to allow for appropriate filtering of the data before comparison with the numerical results. A low pass filter was applied to the accelerometer, linear position, and mooring tension data to remove the signals generated by generator cogging and electro-magnetic noise. The cogging forces produced by the generator were not modeled in OrcaFlex, as they are considered second order when compared with the electro-magnetic damping. A high pass filter was also applied to the accelerometer data to account for drift associated with the instrument.

While the AWAC unit was placed as close as practical to the device during testing there was a phase lag between the waves measured by the AWAC and the response of the device. The time stamps applied to the data for the AWAC and those on the motion measurement package were also not synchronized. This made a time-domain comparison of the measured data and the numerical results extremely difficult. Instead, the measured data was compared with the numerical predictions in the frequency domain to enable calibration of the numerical model.

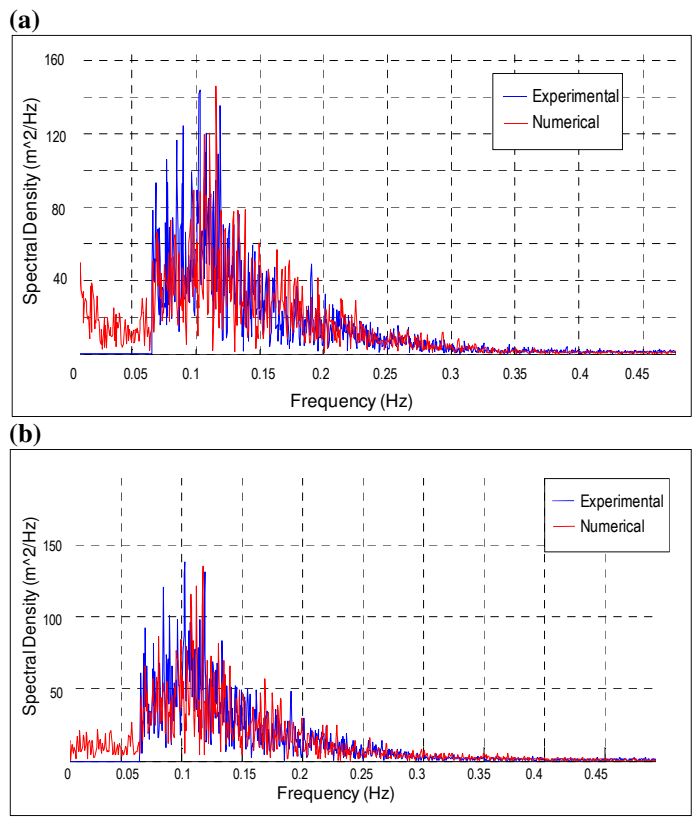

Figure 8 **Comparison of Spectral Density of Spar Heave Displacement: Measured vs. Un-calibrated (a) and Calibrated (b) Numerical Model Predictions**

The first step in the model calibration compared the measured data and the numerical simulation without any generator loading. This no-load case provides comparison of the body

Copyright © 2009 by ASME

motions and frictional damping without the added complexity of generator damping. The wave spectrum measured by the AWAC sensor (Figure 6) was input into OrcaFlex to provide excitation for the system. The mass and buoyancy of the floating bodies were measured prior to the ocean testing and the generator friction was measured on the LTB. The remaining hydrodynamic coefficients including added mass and damping of the spar, buoy, and mooring were then adjusted based on the comparison of the baseline numerical model with the measured data.

Parameters used for comparison included; spar heave, relative motion between the spar and buoy, and mooring line tension. Each of these parameters was compared in the frequency domain and adjustments were made to the hydrodynamic coefficients and mooring stiffness.

As can be seen in Figure 7, the measured heave motions of the spar correlated very well with the predictions of the un-calibrated model. The correlation between the un-calibrated model and the measured data for the spar heave displacement indicates that the assumptions used to calculate the heave added mass of the spar were sound.

The numerical results for the relative velocity between the buoy and spar can be seen in Figure 8. The un-calibrated model predicted a double peaked spectral energy distribution with a peak at 8 seconds and another at 4.4 seconds as seen in Figure 8a.

The peak at 8 seconds corresponds to the dominant period of the wave forcing while the second peak at 4.4 seconds is consistent with the natural frequency of the buoy assuming a heave added mass as described in section 3.1. The measured spectrum also indicates two distinct peaks: one at the dominant wave period of 8 seconds and another at approx. 5.5 seconds. This indicates that the natural frequency of the buoy was underestimated by the un-calibrated model.

An over-estimate of the natural period of the buoy indicates that the heave added mass assumed for the L10 may not have been appropriate. This is not surprising considering the elliptical profile of the buoy used for the L10 when compared with the reference work for a buoy with a rectangular profile.

During the calibration process the added mass of the buoy was increased to better match the shape of the measured spectrum. Figure 8b shows the correlation between the calibrated model and the measured data.

The amplitude of the un-calibrated relative heave velocity spectrum was also significantly lower than the measured spectrum. This indicated that the heave damping of the buoy was over-estimated by the un-calibrated model. In order to calibrate the model the heave damping of the buoy was decreased.

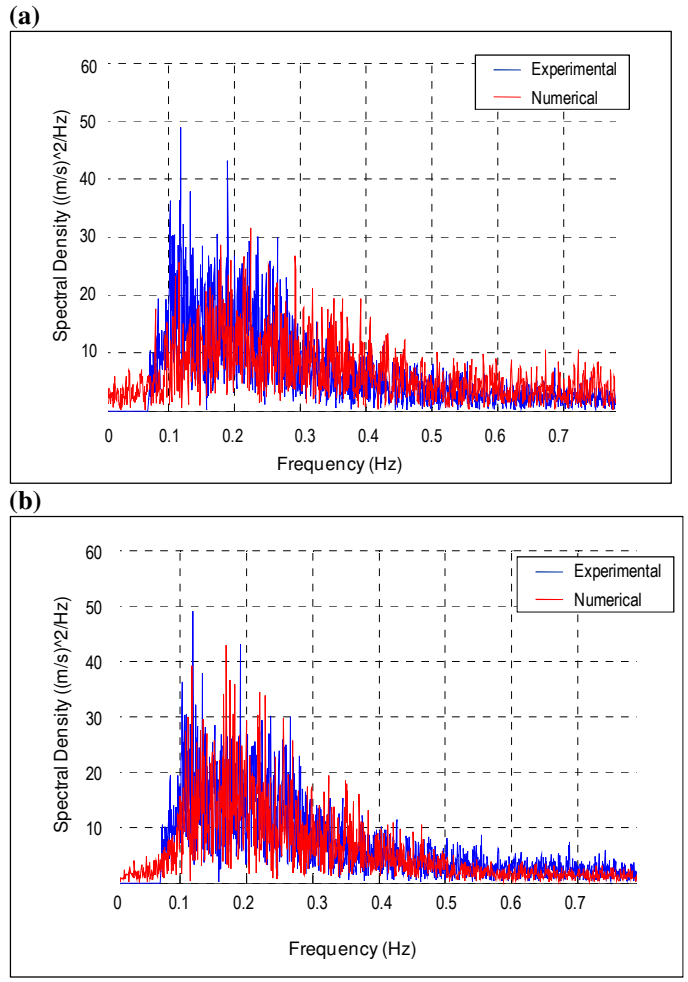

Figure 9 **Comparison of Spectral Density of Relative Heave Velocity Between Buoy and Spar: Measured vs. Un-Calibrated (a) and Calibrated (b) Numerical Model Predictions**

As can be seen in Figure 8b the calibrated model accurately predicts both the shape and the amplitude of the measured spectrum.

The mooring tensions predicted by the numerical model were also compared with the measured data in order to validate modeling assumptions. As can be seen in Figure 9a the shape and magnitude of the un-calibrated spectrum was significantly different than the measured data. The added mass, stiffness, and damping of the mooring system was adjusted and as can be seen in Figure 9b the calibrated model correlates well with the measured data.

Copyright © 2009 by ASME

(a)

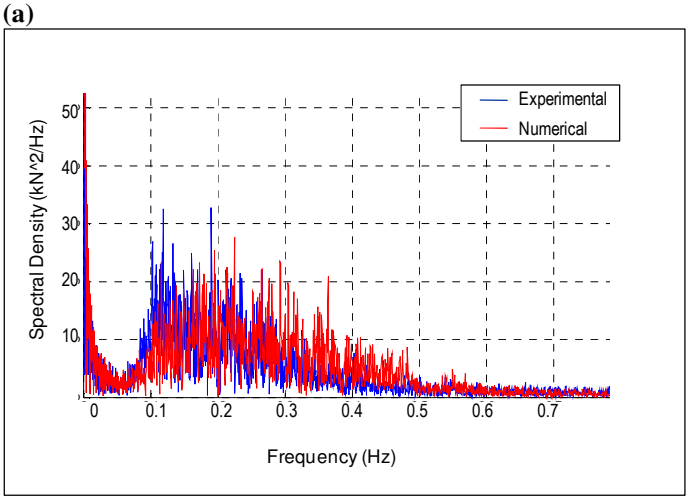

(b)

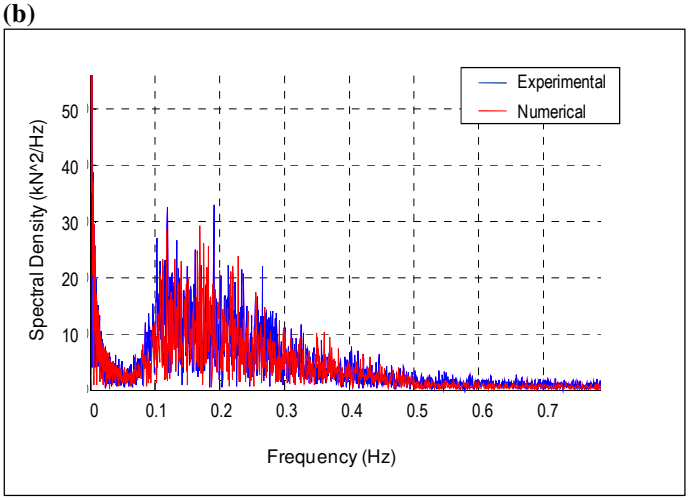

Figure 10 **Comparison of Spectral Density of Mooring Tension: Measured vs. Un-Calibrated (a) Calibrated (b) Numerical Model Predictions**

The calibrated model of the L-10 can be used to make first order predictions of the energy capture in an arbitrary wave climate. This, in turn, allows for estimates of annual energy capture using previously recorded annual wave data.

6.0 CONCLUSIONS

The L-10 wave energy conversion system was designed and built as part of an ongoing partnership between Oregon State University and Columbia Power Technologies. To enable the design of this innovative system researchers have developed a coupled numerical model of the dual body floating system using OrcaFlex. After successfully testing the L-10 prototype in the open ocean over a range of operating conditions, researchers were able to use the measured data to calibrate the coupled model. After calibration, the numerical model shows extremely good agreement with the measured data over the entire range of operating conditions. Based on the agreement between the numerical model and experimental results, researchers have a high degree of confidence in the ability of their numerical model to predict the response of the system. This calibrated model of the floating system, when combined with an electro-mechanical model of the linear generator power take-off, can be used to predict the energy capture potential of the system.

ACKNOWLEDGEMENTS

We would like to thank the US Navy for their support of this project. In addition, this project would not have been possible without the financial contributions from Columbia Power Technologies.

REFERENCES

Agamloh, E., A. Wallace, A. von Jouanne. “A Novel Direct-Drive Ocean Wave Energy Extraction Concept with Contact-less Force Transmission System.” Renewable Energy. 33 (2008), pp. 520-529.

Bhatta, D. "Computation of added mass and damping coefficients due to a heaving cylinder." Journal of Applied Methematics and Computing (2007): 127-140.

Budal, K. "Theory for absorption of wave power by a system of interacting bodies." Journal of Ship Research. (1977): 248-253.

Chung J., G.M Hulbert. "A time integration algorithm for structural dynamics with improved numerical dissapation: The generalized-alpha method." Journal of Applied Mechanics (1993): 371-375.

Chung, J.S. "Added mass and damping of an oscillating circular column with a circular footing." International Journal of Offshore and Polar Engineering. (1994): 11-17.

Elwood, D., E. Amon, S. Yim, A. von Jouanne, T.K.A Brekken. "Experimental Force Characterization and Numerical Modeling of a Taut-Moored Dual-Body Wave Energy Converter." Journal of Offshore Mechanics and Arctic Engineering. (Accepted).

Elwood, D., J. Prudell, C. Stillinger, A. Brown, S. Yim, A. von Jouanne, T. Brekken, R. Paasch. "Design, Construction, and Ocean Testing of a Taut- Moored Dual-Body Wave Energy Converter with a Linear Generator Power Take-off." Renewable Energy. (Submitted).

Mavrakos, S.A. "Hydrodynamic coefficients in heave of two concentric surface-piercing truncated circular cylinders." Applied Ocean Research. (2004): 84-97.

Mueller, M.A. "Electrical generators for direct drive wave energy converters." Proc. IEE Gen. Trans. Distr. (2002): 446-456.

Copyright © 2009 by ASME

Newman, J.N. Marine Hydrodynamics. Cambridge, MA: The MIT Press, 1977.

Ocean Power Technologies. Ocean Power Technologies. 6 June 2008 <http://www.oceanpowertechnologies.com/>.

Orcina Ltd. "OrcaFlex Manual." Daltongate, UK: Orcina Ltd. 2006.

Pelamis Wave Power. Pelamis Wave Power. 6 June 2008 <http://www.pelamiswave.com>.

Prudell, J.H. "Novel design and implementation of a permanant magnet linear tubular generator for wave energy conversion." Masters Thesis. Corvallis, OR: Oregon State University, 2007.

Rhinefrank, K., E. Agamloh, A. von Jouanne A. Wallace, J. Prudell, K. Kimble, J. Aills, E. Schmidt, P. Chan, B. Sweeny, A. Schacher, “Novel Ocean Energy Permanent Magnet Linear Generator Buoy.” Renewable Energy. Feb. 2006.

Copyright © 2009 by ASME