Renewable Energy xxx (2009) 1–7

Contents lists available at ScienceDirect

Renewable Energy

journal homepage: www.elsevier.com/locate/renene

Design, construction, and ocean testing of a taut-moored dual-body wave energy converter with a linear generator power take-off

David Elwood [a,*], Solomon C. Yim [a], Joe Prudell [b], Chad Stillinger [b], Annette von Jouanne [b], Ted Brekken [b], Adam Brown [c], Robert Paasch [c]

[a] School of Civil and Construction Engineering, Oregon State University, Corvallis, Oregon 97331, USA
[b] School of Electrical Engineering and Computer Sciences, Oregon State University, Corvallis, Oregon 97331, USA
[c] Department of Mechanical Engineering, Oregon State University, Corvallis, Oregon 97331, USA

ARTICLE INFO

Article history:
Received 27 December 2008
Accepted 30 April 2009
Available online xxx

Keywords:
Wave
Energy
Direct-Drive
Permanent
Magnet
Linear
Generator
Point
Absorber
Ocean
Renewable
Systems
Design

ABSTRACT

This paper presents an overview of the SeaBeavI project which began in the fall of 2006 and culminated in the ocean testing of a 10 kW direct-drive wave energy conversion system in the fall of 2007. The SeaBeavI project was an interdisciplinary effort bringing together researchers from electrical, mechanical, and ocean engineering. A systems design approach was used to develop the taut-moored dual-body wave energy converter concept with the detailed design focused on production and ease of maintenance.
© 2009 Published by Elsevier Ltd.

UNCORRECTED PROOF

1. Introduction

Modern ocean wave energy research began during the oil crisis of the 1970s. Much of the early work was conducted in Europe by Salter [10] and Evans [3] in Great Britain and Falnes [4] in Norway, amongst others. Several promising concepts were developed by 1980 including point-absorber wave energy converters such as the infamous Salter duck [10] and oscillating water-column (OWC) devices utilizing a Well's turbine [2] for power take-off. With the decrease in oil prices in the early 1980s much of the funding for ocean wave energy conversion was cut and no full scale demonstrations of the technology were constructed. Recently concerns about global warming and the increasing price of conventional energy has led to resurgence in research on ocean wave energy conversion.

Currently several commercial developers are working to build grid-connected wave energy conversion systems. These include the oscillating water-column device, Limpet, installed on the Isle of Islay off Scotland in 2000 [11], and the Pelamis wave energy conversion system deployed off the coast of Portugal in the fall of 2008 [7]. In the United States, Ocean Power Technologies (OPT) has developed a point-absorber wave energy conversion buoy for the US Navy with a test buoy deployed off Oahu, Hawaii [6]. OPT has plans to deploy an array of these buoys off the coast of Reedsport, Oregon representing the first grid-connected wave energy conversion plant in the United States.

2. Concept design

A systems design approach was used to develop the conceptual design of the SeaBeavI wave energy converter. The floating system, mooring, and power take-off concepts were optimized concurrently in order to ensure that the combined system was as efficient as possible. Efficiency of the system was measured both in terms of the power capture efficiency and the overall cost of the system. The

* Corresponding author. Tel.: +1 281 745 7343.
E-mail address: davidericelwood@gmail.com (D. Elwood).

0960-1481/$ – see front matter © 2009 Published by Elsevier Ltd.
doi:10.1016/j.renene.2009.04.028

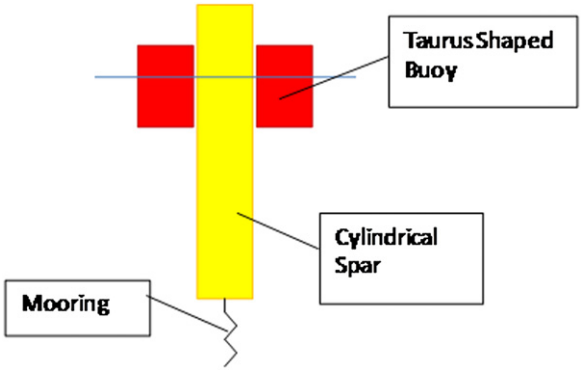

Fig. 1. Dual-body wave energy conversion system concept.

SeaBeavI concept represents an original approach to the conversion of ocean wave energy into electricity.

2.1. Floating system

The floating system concept for the SeaBeavI consists of a central cylindrical spar and an outer Taurus-shaped buoy. The spar is moored to the bottom with the buoy free to translate relative to the spar. Having two floating bodies allows for the central spar to be restrained laterally using a mooring system without limiting the heave of the buoy. This allows for a conventional mooring system to be utilized without the need for subsurface floats to reduce the vertical forces on the system. Fig. 1 provides an illustration of the two-body floating system concept developed for the SeaBeavI.

2.2. Mooring system

In a two-body wave energy converter concept, the relative velocity and force transferred between the spar and the buoy are used to extract energy from the ocean waves. To maximize the power extracted by the system, the relative motion between the two bodies must be maximized while allowing for effective force transmission. The SeaBeavI concept uses a tensioned mooring to restrain the heave of the spar while still allowing the buoy to translate. The tensioned mooring line allows for effective force transmission during both the upstroke and the down stroke of the buoy. A tensioned mooring system also limits the watch circle of the system allowing for tighter spacing in arrays of devices.

2.3. Power take-off system

Conversion of the relative linear motion between the spar and the buoy to electricity is achieved through the use of a permanent magnet linear generator. The generator consists of a stack of permanent magnets housed in the buoy and an armature composed of copper wire and back iron in the spar. As the magnets translate relative to the copper wires, current is induced in the wire due to the changing magnetic field. The generator topology allows for the heavier magnet section to be located in the higher buoyancy buoy. With the armature located in the spar, the power take-off cable is attached to a taut-moored floating body, limiting the forces on the cable. Fig. 2 provides an illustration of the power take-off system concept.

3. Detailed design

3.1. Principal dimensions

Dimensions of the buoy and spar were constrained by the limitations of the long wave flume at the O.H. Hinsdale Wave

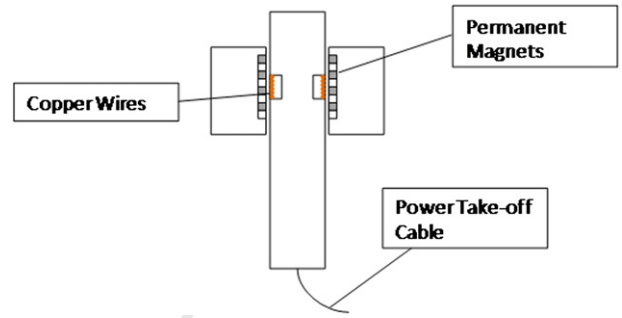

Fig. 2. Power take-off system concept.

Research Laboratory. Prior to testing in the ocean, the system was intended to be tested in the laboratory under controlled conditions. The maximum water depth of the long wave flume is 10 feet, which limited the overall draft of the system. The diameter of the buoy was constrained by the width of the flume in addition to depth. Since the flume is 12' wide, the maximum diameter to ensure a blockage of less than 33% is 4.95 feet. The final configuration of the system had an overall draft of 8.17 feet with a buoy diameter of 5.08 feet. A buoy diameter greater than the initial target was required to provide adequate stability based on the as-built weight of the generator. Fig. 3 provides a rendering of the spar and buoy and their internal arrangements (Table 1).

3.2. Buoy structure

The buoy structure was designed in a modular fashion to allow for ease of construction and maintenance. The buoy was constructed of glass reinforced plastic (fiberglass) with high density foam to provide extra buoyancy. Because the linear generator depends on magnetics for the contactless force transmission and the generation of electricity, the use of magnetic materials in the structure of the buoy and spar is not desirable. In addition, fiberglass does not corrode in salt water making it a preferred material for salt water applications.

The magnet section of the linear generator was integrated into the buoy structure so that it was modular and removable for later

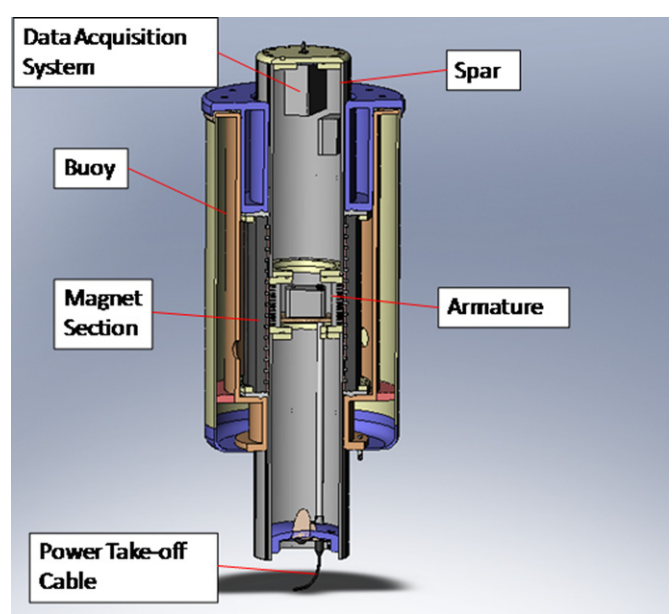

Fig. 3. Rendering of spar and buoy general arrangement.

UNCORRECTED PROOF

Please cite this article in press as: Elwood D, et al., Design, construction, and ocean testing of a taut-moored dual-body wave energy converter..., Renewable Energy (2009), doi:10.1016/j.renene.2009.04.028

Table 1
Principal dimensions of the SeaBeavI wave energy converter.

Buoy		
Diameter	5.08	feet
Draft	6.00	feet
Depth	7.50	feet
Freeboard	1.50	feet
Displacement	6473.90	lbf
SPAR		
Diameter	2.00	feet
Draft	8.17	feet
Depth	10.71	feet
Freeboard	2.54	feet
Displacement	1616.42	lbf

testing of the generator on a linear test bed. A keyway at the top and bottom of the magnet section transfers the lateral forces between the magnet section and the hull of the buoy. Rubber o-rings were used to seal the joint between the magnet section and the keyway. To hold the magnet section in place and provide compression for the o-rings, a heavy fiberglass lid was attached to the buoy structure with 12 half inch stainless steel bolts. A general arrangement of the buoy structure is included in Appendix 1.

3.3. Spar structure

The spar structure was designed in three sections allowing the armature to be removed for maintenance and testing. Like the buoy, the spar is made entirely of fiberglass with stainless steel fasteners. Having a non-magnetic spar is important since the spar lies within the field of the magnet section. The bottom section of the spar houses a ballast tank used in the tensioning of the mooring system. A half spherical base on the bottom of the ballast tank provides a strong point for attaching the mooring line. The power take-off cable attaches to a wet mateable waterproof connector at the base of the spar.

The center section of the spar houses the armature of the linear generator along with the battery to power the ballast control and data acquisition systems. Twelve sections of ½ inch stainless steel threaded rod join the center section to the top and bottom compartments of the spar. Compression plates with two sets of rubber o-rings ensure that the entire spar is sealed. A bilge pump in the lower section of the spar provides both dynamic ballast control and protection against leaks in the operating condition.

The top section of the spar houses the ballast control and data acquisition systems. A linear position sensor utilizing a magnetic pickup records the relative displacement between the buoy and the spar. Thermocouples mounted on the inside of the armature record the temperature of the coils during operation of the generator. Wireless communication is used to transmit the measured data to a nearby research vessel along with providing control signals for the pumping system. A fiberglass lid attached with a 12 bolt pattern and sealed with a rubber o-ring isolates the top section of the spar from the sea. A general arrangement of the spar structure is included in Appendix 1.

3.4. Linear generator

The generator consists of an 1196 mm long magnet section housed in the buoy and a 286 mm long armature in the spar [9]. The magnet section is composed of over 900 individual high density neodymium iron boron magnets held in place using aluminum retainers. The back iron on the magnet section is radially laminated to reduce eddy current losses. A composite structure utilizing stainless steel rods, aluminum end pieces, and a fiberglass shell was used to provide structural support for the magnets and back iron during construction and installation. This structure also enabled

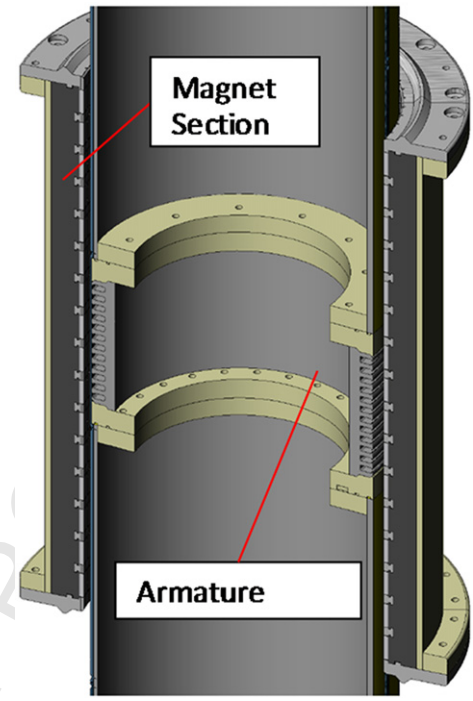

Fig. 4. Crosssection of the magnet section and armature.

the generator to be tested without the support of the buoy structure. A thin stainless steel tube adhered to the inner radius of the magnet section isolates the permanent magnets from the sea water and provides a smooth surface for the linear bearing system.

The armature also utilizes radially laminated back iron with slots filled with windings of 14 gauge copper wire. Each coil of the armature consists of 77 turns of wire with 4 coils for each of the 3 phases of the generator. The structural rigidity of the armature is provided by two fiberglass compression rings tied together using ½ inch stainless steel rods. Each phase of the generator was terminated into a central junction box and the power was fed out of the spar through the power take-off cable. A rendering of the magnet section and armature is included as Fig. 4.

3.5. Linear bearings

To enable efficient conversion of the linear motion between the spar and the buoy into electricity, the gap between the magnet section and the armature must be small ($<=5$ mm). This gap needs to be uniform around the entire circumference of the spar in order to ensure that the magnetic normal forces between the magnet section and the armature are balanced. If the alignment is not precise, the normal force between the two sections becomes extremely large and increased friction will result.

Thin strips of a laminated plastic material hold the gap between the buoy and the spar and provide a smooth bearing surface to ride against the stainless steel tube adhered to the inside of the magnet section. Twelve 1/2 inch wide strips are glued into grooves evenly spaced around the circumference of the outer shell of the spar. The material used to manufacture the bearing strips is designed to be water lubricated making it ideally suited for marine applications.

3.6. Mooring

The tensioned mooring system consists of a single-anchor-leg mooring with a mushroom anchor. The buoyancy of the spar is

UNCORRECTED PROOF

Please cite this article in press as: Elwood D, et al., Design, construction, and ocean testing of a taut-moored dual-body wave energy converter..., Renewable Energy (2009), doi:10.1016/j.renene.2009.04.028

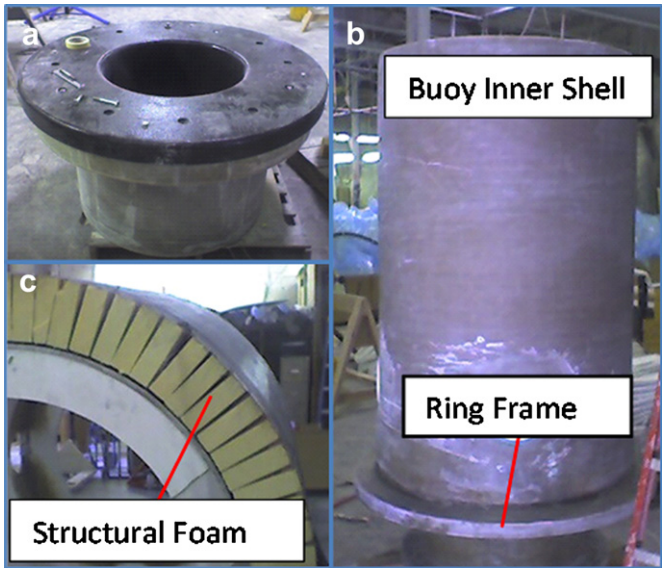

Fig. 5. a) Buoy lid b) Buoy inner shell and ring frame c) Buoy outer shell with added foam.

greater than its weight, generating 650 pounds of pretension in the mooring line. This pretension is sufficient to ensure that the line will not go into compression during the down stroke of the buoy. Mooring pretension is achieved through the use of spar water ballast during installation. The spar ballast tank is filled with water prior to installation and the mooring line is attached slack to the base of the spar. Slack in the mooring system is removed using a tensioner system and the water is pumped out of the ballast tank to achieve the desired pretension.

The mooring line is composed of steel bottom chain and synthetic rope joined together using forged anchor shackles. A cluster of trawl floats is used as a mid-column float to remove the weight of the bottom chain from the spar. A pear link at the top of the mid-column float allows for the tensioner system to be attached by divers during installation of the device. Two 3:1 polycarbonate blocks and 300 feet of synthetic line make up the block and tackle system used to tension the mooring. Once the tensioner has been attached to the mid-column float by a dive team, the system can be tensioned and detensioned from the surface. A general arrangement of the mooring system is included in the Appendix.

4. Construction

Construction of the SeaBeavI wave energy conversion system was completed during the summer of 2007 with the subsystems

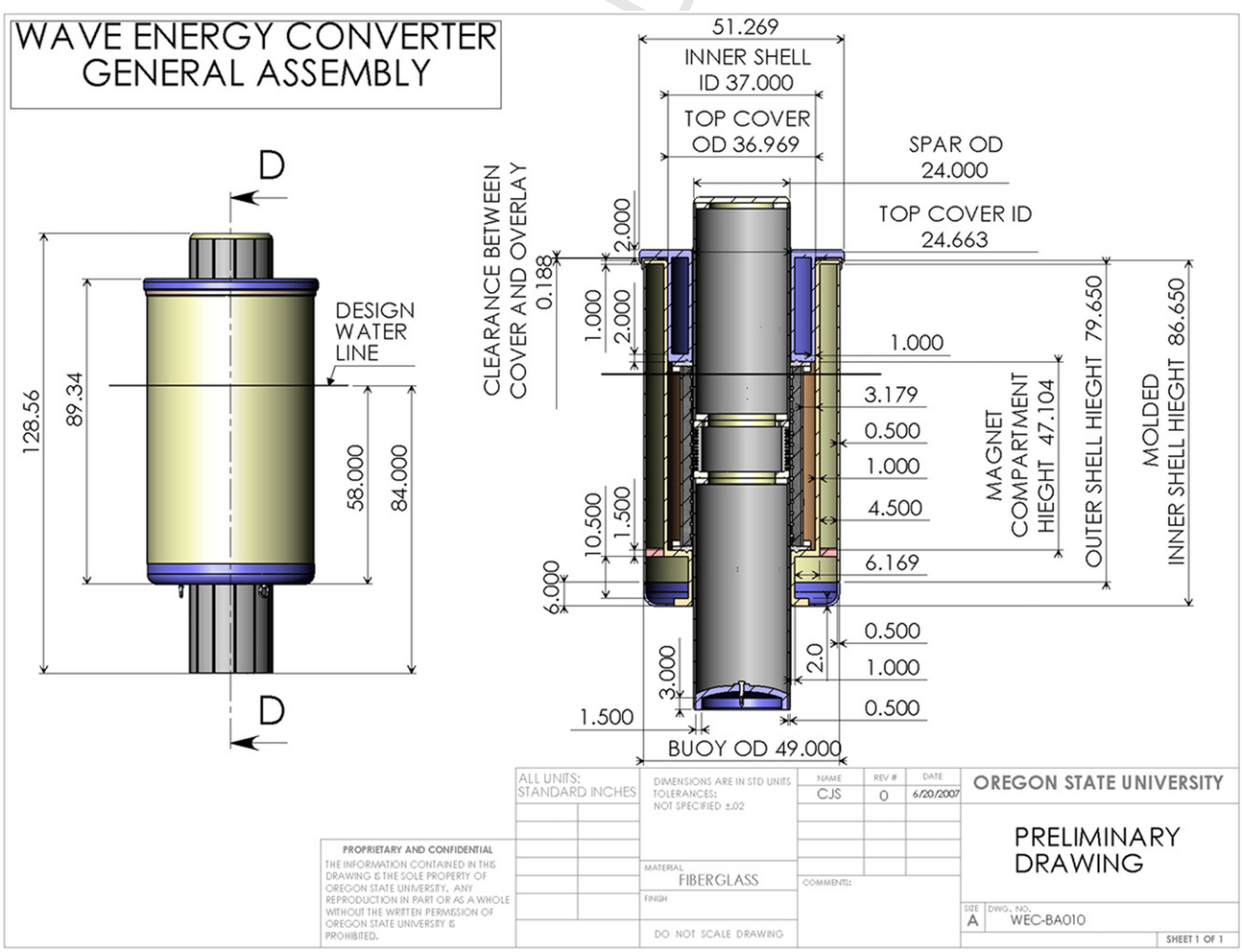

Fig. 6. a) Spar structure showing the ballast tank, armature, and electronics compartment b) Bottom plate with wet mateable connector and strong point c) Interior structure showing fiberglass ring frame at the top of the armature.

Please cite this article in press as: Elwood D, et al., Design, construction, and ocean testing of a taut-moored dual-body wave energy converter..., Renewable Energy (2009), doi:10.1016/j.renene.2009.04.028

having been built separately by their respective manufacturers. The structural components were built at Plasti-Fab Inc., a structural fiberglass manufacturer in Tualitin, Oregon. While the fiberglass components were being fabricated, the magnet section and armature were being constructed by graduate research assistants at Oregon State. Simultaneously, the mooring was being assembled by the staff rigger at England Marine in Newport, Oregon.

4.1. Structural components

The outer shell of the buoy was constructed using a filament winding process on a large diameter mandrel. Both the bottom ring frame and the inner shell of the buoy structure were molded using a vacuum driven resin transfer process. To provide extra buoyancy and stability for the buoy, high density structural foam was added to the exterior of the outer shell and sealed with a layer of fiberglass mat. The lid for the buoy was constructed of fiberglass with a foam core. Keyways for the top and bottom of the magnet section were also molded and grooves for the o-rings machined using a 3DOF computer controlled router. Pictures of the buoy structure can be seen in Fig. 5.

The outer shell of the spar was constructed from two sections of 24 inch fiberglass water pipe with a 1/2 inch wall thickness. The outer diameter of the pipe was machined and slots for the bearing strips were cut using a CNC lathe. A molded half spherical fiberglass bottom plate was fixed to the bottom of the spar to provide an attachment point for the mooring line. One inch thick fiberglass ring frames were molded for the top of the lower spar section, and the top and bottom of the upper section. O-ring grooves were cut in the ring frames using the computer controlled router. Pictures of the spar structure during construction can be seen in Fig. 6.

4.2. Linear generator

The linear generator components were assembled by hand by graduate research assistants (9). Each of the laminations for the armature and magnet section was hand shimmed using high temperature shim tape. The armature laminations were stacked using the fiberglass compression plates to hold the laminations in place during construction. The magnet section was constructed in quarter round sections that were assembled in a specially made jig.

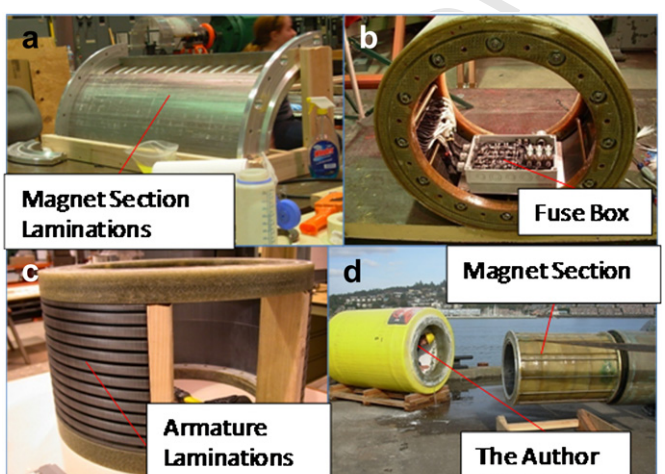

Fig. 7. a) Laminations being assembled for one of the magnet section quarter rounds b) Completed armature with terminations and fuse box c) Armature laminations being assembled between the fiberglass compression plates d) Magnet section being removed from the buoy after testing.

After the laminations were assembled, the quarter rounds and armature were dipped in high temperature epoxy resin to protect the iron from corrosion and provide insulation between the laminations. The permanent magnets were fixed to the quarter rounds individually and then the sections were assembled to form the completed magnet section. The copper was wound onto the armature using a specially built winder with fiberglass insulation between layers of windings to prevent internal shorts between wires. Pictures of the armature and magnet section build can be seen in Fig. 7 a and c. The completed generator components can be seen in Fig. 7 b and d.

4.3. Mooring system

Eyelets were spliced into the ends of the spectra rope in order to prevent abrasion between the rope and the connecting shackles. A marker float for the mooring was built using a surplus 1 m steel float fitted with a mast and a 2 nautical mile solar powered light programmed to flash 15 times per minute. The anchor for the system was an 8200 pound steel mushroom anchor purchased as surplus from a scrap yard in Seattle, WA. The tensioner system consisted of two Harken 75 mm Carbo triple blocks run with 300 feet of Sampson Dura-Plex line. The tensioner was attached to a titanium eye nut anchored to the base plate of the spar. A rope clutch was used to enable the tension of the system to be adjusted during operation. Fig. 8 provides photographs of the as-built mooring system.

5. Installation and ocean testing

The installation and testing of the SeaBeavI wave energy converter was completed between August and October of 2007. The system was installed in two phases, with the mooring system being installed in mid-August and the floating system in early October. The SeaBeavI was tested on the pier at the Hatfield Marine Science Center and in Yaquina Bay followed by testing in the open ocean.

5.1. Installation vessel

The Research Vessel Pacific Storm was used for both the mooring installation and the ocean testing of the wave energy conversion system. The Pacific Storm is a converted fishing trawler owned by the Oregon State Marine Mammal Institute. The 80 foot vessel is outfitted with a 10,000 pound crane used to launch the two rigid inflatable boats used for tracking and tagging whales. With the net reel and stern ramp removed, the working deck of the vessel is quite large, making it well suited for deploying oceanographic equipment.

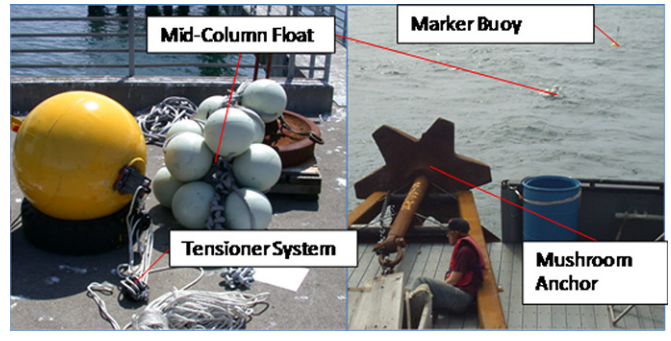

Fig. 8. a) Tensioner system and mid-column float b) Mooring system just prior to installation.

UNCORRECTED PROOF

Please cite this article in press as: Elwood D, et al., Design, construction, and ocean testing of a taut-moored dual-body wave energy converter..., Renewable Energy (2009), doi:10.1016/j.renene.2009.04.028

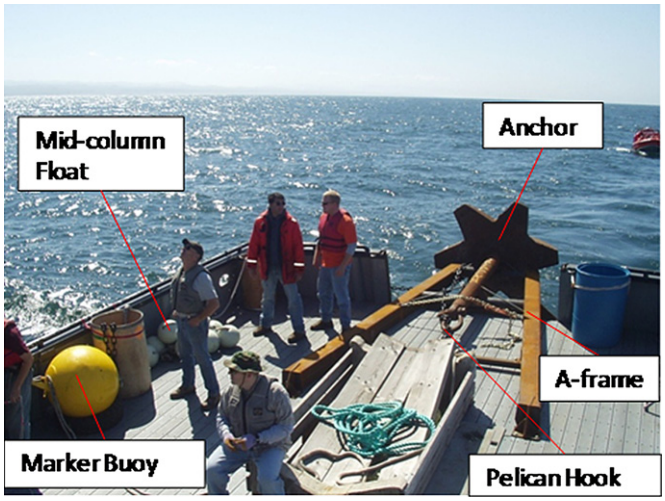

Fig. 9. Mooring system staged on the deck of the Pacific Storm just prior to installation.

5.2. Mooring installation

The mooring system for the SeaBeavI was designed to be installed prior to the installation of the floating system. After the anchor, mooring line, and mid-column float were installed, SCUBA divers would be used to attach the tensioner system to the mid-column float during installation of the floating system. A steel A-frame, shown in Fig. 9, was designed as a launching platform for the mushroom anchor to facilitate the deployment of the mooring from the Pacific Storm. A pelican hook attached the shank of the anchor to the forward end of the A-frame, providing a quick release.

Before the mooring system was installed, the components were staged on the starboard rail of the aft deck of the Pacific Storm. The chain and spectra rope were coiled into barrels to ensure that the line fed freely as the system was deployed. Installation of the mooring began by deploying the marker float using the boat's crane. The rest of the mooring system was then strung out behind the vessel, as seen in Fig. 8b, and towed to the test site location. Once on station, the pelican hook was tripped and the weight of the head of the mushroom anchor caused the anchor to pivot off the A-frame and into the water, pulling the mooring line down to the bottom.

5.3. Bay testing

Before testing the SeaBeavI in the open ocean, the system was tested on the pier at the Hatfield Marine Science Center and in Yaquina Bay. The ballast control system, data acquisition system, and mooring tensioner were all tested in controlled conditions prior to ocean testing. The linear generator was tested on the pier by placing the buoy on concrete piers and actuating the spar using a boom crane (see Fig. 10a).

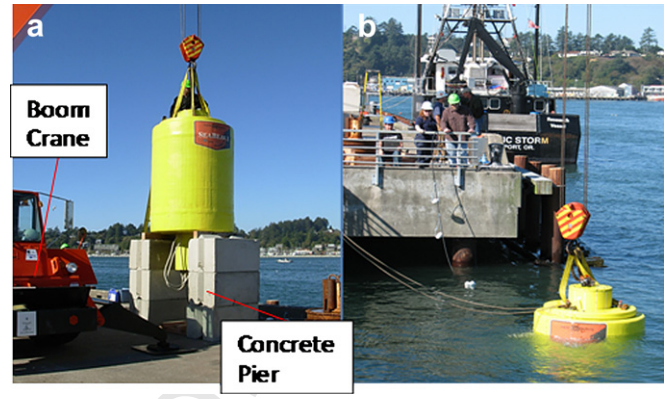

Fig. 10. a) Crane actuating the SeaBeavI on the pier b) SeaBeavI being tested in Yaquina Bay.

A stack of railroad wheels was used as a test anchor and placed in the bay adjacent to the port operations pier at Hatfield. The mooring tensioner was attached to the railroad wheels by divers and the spar and buoy were lifted into the water using the boom crane. Once the spar and buoy had been installed, the mooring tensioner was tested from the pier. Unfortunately the tensioner did not perform as intended during the bay testing. Due to friction in the system, the slack could not be taken up by the block and tackle and when the spar was deballasted, the line was not tensioned.

During the bay testing, relative motion between the float and spar were observed, and thus some power was being generated. Power measurement took place on the pier with controlled actuation of the generator using the dock-side crane. The testing of the linear generator on the pier indicated that the system was capable of generating over 1 kW at 0.5 m/s [9]. The cable tension required to actuate the spar at the rated power level was significantly greater than was anticipated due in part to the linear bearing friction. Precise measurement of the tension was not possible since the load cell on the crane did not have data logging capability. The pier side testing indicated that the system was capable of generating over 1 kW if the required force could be generated by the buoy and spar.

5.4. Ocean testing

Prior to ocean testing the decision was made not to install the SeaBeavI on the tensioned mooring system. Since the tensioning

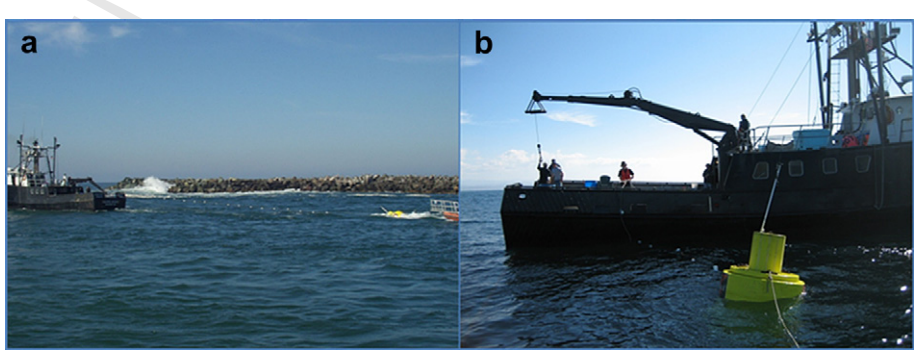

Fig. 11. a) Towing arrangement for the SeaBeavI b) SeaBeavI just prior to installation of steel reaction plate.

UNCORRECTED PROOF

Please cite this article in press as: Elwood D, et al., Design, construction, and ocean testing of a taut-moored dual-body wave energy converter..., Renewable Energy (2009), doi:10.1016/j.renene.2009.04.028

system had failed to perform as expected in the bay, and the dive team was hesitant to try again in the open ocean, installing the tensioned mooring was not feasible. In place of the tensioned mooring, a 400 pound steel reaction plate was suspended 40 feet below the spar and attached to the eye nut on the spar's base plate.

On October 13, 2007 an excellent weather window for ocean testing was available with the SeaBeavI and the installation vessel staged and ready for testing. The significant wave height was between 2 and 3 meters with virtually no wind. The decision was made after successfully testing the generator on the day before (October 12th) that the SeaBeavI would be towed out to the test site the following morning and tested with a suspended reaction plate.

The towing arrangement of the SeaBeavI consisted of a 150 foot towline attached to the stern of the Pacific Storm with a two point bridle. A second line from the base plate of the spar was tended by one of the Pacific Storm's RHIBs following behind the device. The power take-off cable was attached to the wet mateable connector on the base plate of the spar and was buoyed by foam floats tied to the cable approximately every 5 feet. The cable was attached to a load bank and oscilloscope in the wet lab of the Pacific Storm where test personnel could monitor the power output from the device. The towing arrangement can be seen in Fig. 11a.

During the towing operation to open ocean, the team began to be concerned that the spar and float were binding (no relative motion between the two bodies). Once the SeaBeavI was on station at the test site, the reaction plate was lifted from the deck of the Pacific Storm and lowered into the water using the crane (see Fig. 11b). With the reaction plate installed, the spar and buoy were stable and had very little pitch or roll response. As during the tow, no relative motion was observed between the buoy and spar, and thus no power was generated in open ocean… It was later determined that the bearing strips (that were designed for salt water environments) were swelling into the airgap over the course of the testing, and the team also documented that some magnets in the magnet section were starting to "bulge" into the airgap. Overall, the bearing/sliding surfaces needed to be optimized for future testing.

6. Conclusions

The ocean testing of the SeaBeavI helped to improve the testing procedures for wave energy devices and gave the WESRF researchers valuable experience on the ocean. The towing procedure implemented using the Pacific Storm was very successful and was determined to be preferable to installing the device using a crane. Optimization of the bearing/sliding surfaces was necessary to minimize the friction between the heaving float and the relatively stationary spar. Additionally, it was determined that a 400 pound reaction plate is not sufficient to provide reaction force for the generator in a 2 m significant wave height. For successful operation of the system as built, a larger reaction plate or tensioned mooring would be required.

Uncited references

[1,5,8].

Acknowledgments

We are thankful for the generous in-kind donations from Plasti-Fab Inc. and the Hatfield Marine Science Center, which made this project possible. We would also like to thank the Department of Energy and our industry partners Columbia Power Technologies and Peregrine Power for their support of our research.

References

[1] ~~Archimedes wave swing, http://awsocean.com/; 6 June 2008.~~ Q1
[2] Curran R, Gato LMC. The energy conversion performance of several types of wells turbine designs. In: Proceedings of the institute of mechanical engineers; 1997:133–45.
[3] Evans DV. Some theoretical aspects of three dimensional wave energy absorbers. In: Proceedings of the first symposium on wave energy utilization. Gothenburg, Sweden: Chalmers University of Technology; 1979. p. 77–106.
[4] Falnes J. Ocean waves and oscillating systems. Cambridge, UK: Cambridge University Press; 2002.
[5] ~~Mueller MA. Electrical generators for direct drive wave energy converters. IEE Proceedings Generation, Transmission and Distribution. 2002:446–56.~~ Q2
[6] Ocean Power Technologies. Ocean power technologies, http://www.oceanpowertechnologies.com/; 6 June 2008.
[7] Pelamis Wave Power. Pelamis wave power, http://www.pelamiswave.com; 6 June 2008.
[8] ~~Polinder H, Damen MEC, Gardner F. Linear PM generator for wave energy conversion in the AWS. IEEE Transactions on Energy Conversion 2004:583–9.~~
[9] Prudell JH. Novel design and implementation of a permanent magnet linear tubular generator for wave energy conversion. Masters thesis. Corvallis, OR: Oregon State University, 2007.
[10] Salter SH, Jeffery DC, Taylor JRM. The architecture of nodding duck wave power generators. The Naval Architect; 1976.
[11] WaveGen. WaveGen, http://www/wavegen.co.uk; 6 June 2008.

UNCORRECTED PROOF

Please cite this article in press as: Elwood D, et al., Design, construction, and ocean testing of a taut-moored dual-body wave energy converter..., Renewable Energy (2009), doi:10.1016/j.renene.2009.04.028