A Power Analysis and Data Acquisition System for Ocean Wave Energy Device Testing

E. Amon, T.K.A. Brekken, A. von Jouanne
Oregon State University
Electrical Engineering and Computer Science
Corvallis, OR 97331-5501, USA

***Abstract*-In the testing of ocean wave energy devices, the demand for a portable and robust data acquisition and electrical loading system has become apparent. This paper investigates the development of an inclusive system combining loading capabilities, real-time power analysis, and data acquisition for the testing of deployed ocean wave energy devices.**

I. Introduction

This paper describes the development of a portable Power Analysis and Data Acquisition (PADA) system for use in the testing of wave energy devices in a marine environment. Comprehensive testing and characterization of these wave energy devices in the ocean is crucial for development and selection of optimum wave energy converter technologies. Requirements of this system include the ability to provide an electrical load to the wave energy converter while acquiring data on its output electrical characteristics. Systems are currently available in laboratory environments which meet these needs; these include adjustable resistive load banks, four-quadrant converters for regenerative loading, and standard measurement equipment such as multimeters, oscilloscopes, and power analyzers. Due to the harsh nature of the marine environment in which wave energy devices are designed to operate, it has become necessary to develop a system specially suited for operation in this setting. Currently under development at Oregon State University is a 30kW PADA system prototype, being designed and built to aid in the testing of small-scale wave energy devices.

II. System Requirements

The PADA system is to be fully inclusive and portable for use in testing and characterizing of ocean wave energy devices. This creates unique requirements for both the electrical loading and data acquisition systems.

A. Electrical Loading System

A 30kW power rating was decided upon to support small-scale wave energy devices. Due to the variation in the electrical output configuration of these wave energy prototypes, a universal loading system which can accept a variety of inputs is desired. Wave energy devices may be single- or three-phase configurations with the possibility of dc, ac, or variable frequency ac output. The PADA system must be capable of accommodating these input configurations at a range of voltage levels.

B. Data Acquisition System

For characterization of wave energy devices, it is necessary to measure output voltage and current waveforms with respect to time at high sampling rates. From these waveforms, post processing of the data can provide rms voltage and current, frequency, real and reactive power, power factor, harmonic content, and other quantitative analyses [1].

III. Converter Topologies

Loading systems utilizing active converters are often used in power laboratory environments. In the case of four-quadrant converters, most of the load power may be regenerated onto the utility grid with the only system losses attributed to efficiency of the power conversion process. A typical three-phase, four-quadrant converter is realized in the form of two back to back three-phase converters as shown in Fig. 1. The input converter controls power flow from the test system while the output converter controls regeneration of power to the utility grid and maintains stability of the dc bus voltage [2].

In addition to being highly efficient with excellent power density, active converters also have the advantage of flexibility. A three-phase active converter may be used to load single-phase ac or dc systems using two of the three available switching legs, provided the control strategy is properly altered [2]. An example of this connection is shown in Fig. 2. Also, by altering the control strategy, active converters may be used to represent a nonlinear, resistive, or reactive load.

As an alternative to the four-quadrant topology, the output three-phase converter could be replaced with a dc-dc converter to allow power dissipation in a fixed resistive load. In this configuration, the dc-dc buck converter would control power flow from the dc bus to the low impedance resistive load. This configuration is shown in Fig. 3.

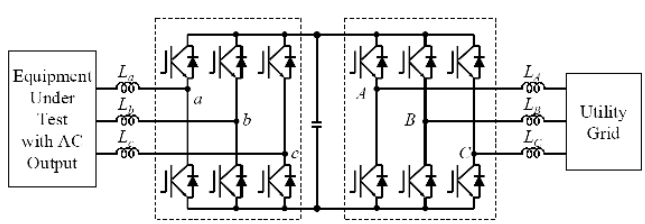

Fig. 1. Three-phase, four-quadrant converter [2].

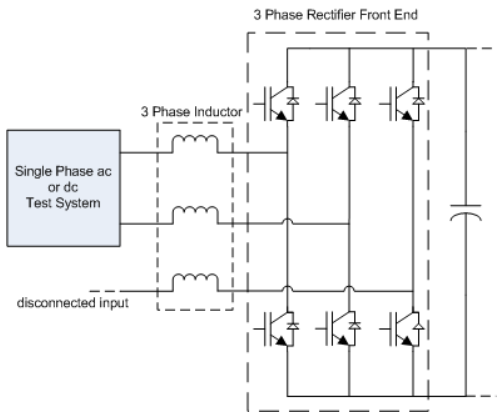

Fig. 2. Single-phase ac or dc loading with a three-phase rectifier.

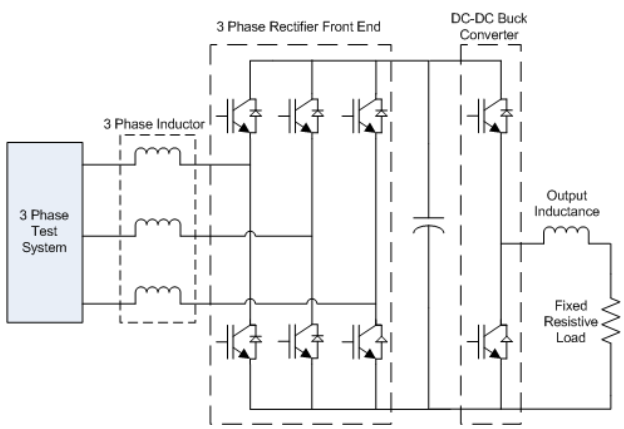

Fig. 3. Active three-phase converter with a controlled resistive load.

IV. Prototype PADA System

To accommodate the variety of electrical inputs which may exist in wave energy converter prototypes, the PADA system was designed utilizing the converter topology shown in Fig. 3. The major system components are discussed below, including those related to system protection, power processing, data acquisition, and controls. A full system schematic is provided in Fig. 4 with internal components shown in Fig. 5 and Fig. 6.

A. Three-Phase Rectifier and dc-dc Buck Converter

The power electronic components of the PADA system are comprised of two Powerex Pow-R-Pak h-bridge IGBT assemblies. These pre-configured assemblies are arranged in a two-leg, h-bridge configuration with an integrated IGBT gate driver board by Applied Power Systems. The driver board has built in protection against dc bus overvoltage and input phase overcurrent. The boards also contain built in dead-time circuitry to prevent shorting of the dc bus in the event of a control system malfunction. One h-bridge assembly and one leg from the second assembly create the three-phase active rectifier front-end, while the remaining leg of the second assembly becomes the dc-dc buck converter for controlling power dissipation to the resistive load. The IGBTs utilized are rated for 1200V with a 75A continuous current rating and are capable of switching frequencies up to 15kHz. Each IGBT and reverse-connected diode pair have been fitted with a resistor-capacitor-diode (RCD) snubber.

B. System Protection

At the input to the PADA system are three metal oxide varistors (MOVs) with a 1 kV clamping voltage rating connected line-to-line. The purpose of the MOVs is to limit overvoltage at the input of the PADA system which could be caused by open-circuit wave energy generator voltages when the input circuit breakers are not closed.

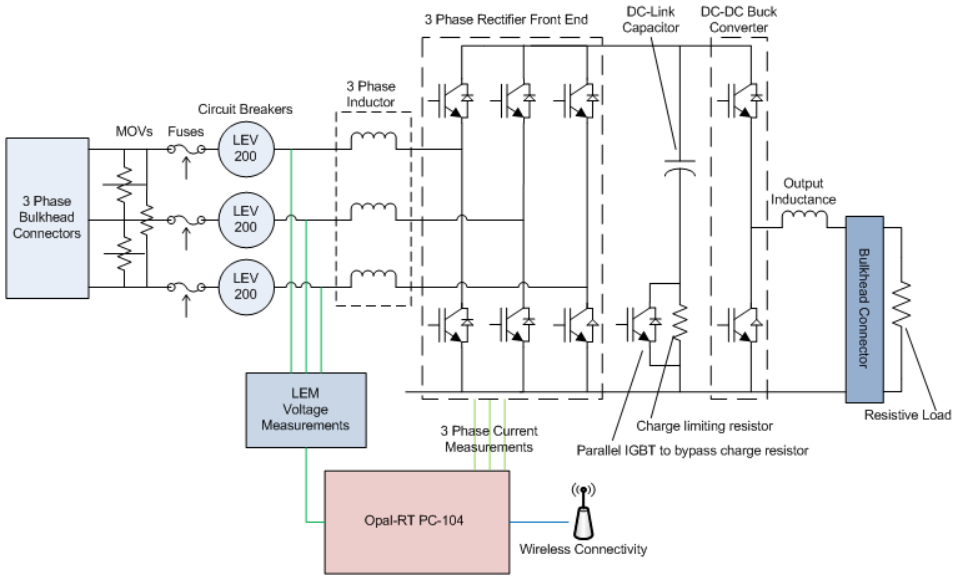

Fig. 4. PADA 30kW prototype system schematic.

Located after the MOVs are input fuses rated to protect the three-phase line reactor and the semiconductor devices used in the three-phase active rectifier. These fuses are not sized to protect wave energy generator windings as they are sized for the full rated current capacity of the PADA system.

Following the input fuses is a set of Tyco Electronics LEV200 mechanical relays controlled by digital I/O of the controller through a solid state relay. The use of a solid state relay was required as the input current requirement of the mechanical relays exceeds that which can be sourced by the controller's digital I/O. Because these relays are controlled by the digital I/O, it is possible for the operator to control their operation from the host computer. Additionally, system protection can be enhanced as the control scheme may be configured to open the input relays in the event an overcurrent condition or another type of fault occurs.

C. System Input and Output Inductance

At the input to the three-phase active rectifier front-end is a three-phase inductor or line reactor. The purpose of this element is to provide isolation between the pulsed voltage waveforms produced by the pulse-width-modulated (PWM) rectifier bridge and the wave energy device under test. The purpose of inductance at the output of the dc-dc buck converter is to reduce current ripple at the output caused by the low impedance of the load resistor. This is accomplished by the inductor increasing the load impedance at the switching frequency of the dc-dc buck converter.

D. Voltage and Current Transducers

LEM voltage transducers provide isolation for measurement of the input voltage and dc bus voltage. These voltage transducers source a current proportional to their input voltage. At the analog input to the controller, a properly scaled resistor is connected in series with this current source, across which an analog voltage proportional to the input voltage is measured.

Current transducers are integrated with the Powerex three-phase bridge, providing current measurement at each leg of the converter, including the dc-dc buck converter. These signals are isolated in the Applied Power Systems driver boards and a voltage proportional to current is provided as an output for interface with the control system.

E. DC Bus Charge Limiting Resistors with Parallel IGBT

In series with the 825µF dc bus capacitor bank are two series-connected 10Ω thick film resistors. The purpose of these resistors is to limit the inrush current at the instant the input circuit breakers are closed. This adds a level of protection against over current of low-power wave energy devices during initial closing of the input relays. Connected in parallel with these resistors is an IGBT which can be gated to short the resistors after the initial inrush current occurs. These charge limiting resistors have not yet been implemented and are currently bypassed.

F. Opal-RT PC/104 Rapid Prototyper

The PC/104 Rapid Prototyper by Opal-RT is a real-time hardware-in-loop simulator chosen for use in data acquisition and control in the PADA system. When utilizing eight analog inputs, this system is capable of 250µs data sampling and closed loop control intervals. A user can control operation of the PADA system while monitoring performance data in real-time. Signals of interest can be recorded as time-stamped data to the internal flash memory storage for post-processing at a later time, while packets of data can be sent to the host computer for observation. The ability to store data allows extended periods of testing to be conducted without constant input or observation by the user. The duration of testing will be limited by storage capacity, which is directly affected by sampling rates and the number of signals being recorded.

G. System Enclosure

Operation in the ocean environment requires careful consideration be taken with respect to component enclosures, as the sensitive data acquisition equipment and any control systems should not be exposed to the corrosive sea water. It can be expected that the PADA system will be exposed to wave splash and occasional submersion. To ensure the data acquisition and control systems do not get exposed to the corrosive sea water, a waterproof enclosure is utilized. For connections through the enclosure, waterproof bulkhead connectors are used for all power- and signal-level connections to maintain the integrity of the enclosure.

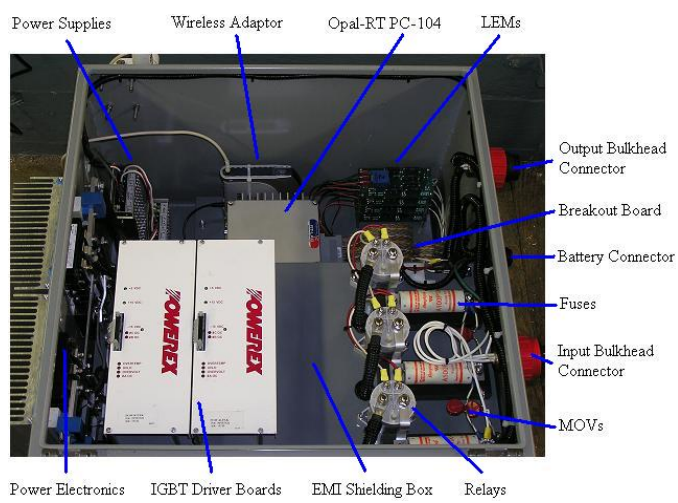

Fig. 5. PADA system internal components.

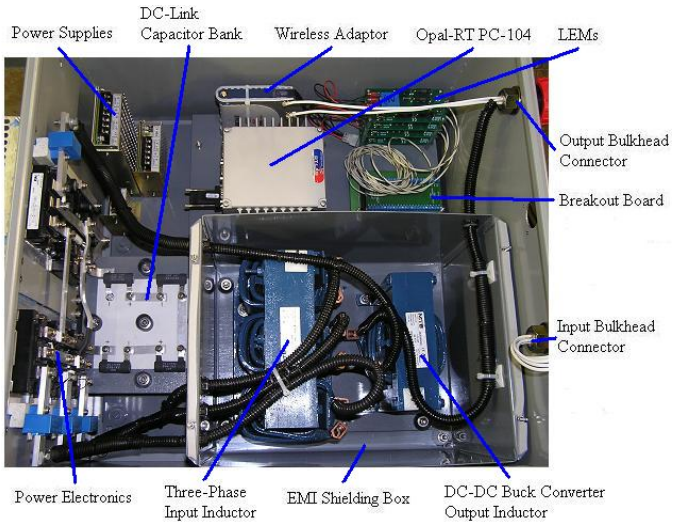

Fig. 6. PADA system internal components.

V. System Control

Control of the PADA system is accomplished entirely through use of the Opal-RT PC/104 Rapid Prototyper. Control system models can be assembled in Matlab Simulink and then compiled using Opal-RT software to be run on the PC/104 hardware. The operator, connected from a host computer, has full control over functions of the control system, including control of the main input relays and adjustment of all gains. The PC/104 takes analog input signals representing three-phase input voltage and dc bus voltage from the LEM voltage transducers and obtains three-phase input current from current transducers in the Powerex assemblies.

A. Three-Phase Active Front-End Control

Control of the three-phase active front-end is to be accomplished using a simple vector control by sensing the position of the generator and placing the current reference 90 degrees ahead of the flux. Alternatively, an encoder could be utilized on one of the unused analog inputs to provide a position signal. A simple resistive control was to be implemented where the current reference is proportional to the measured terminal voltage. This control allows the three-phase active front-end to emulate a three-phase resistive load.

B. Buck Converter Control

As power flows through the three-phase bridge into the dc bus, it will cause an increase in the voltage on the dc bus capacitors. Stability of the dc bus voltage is controlled by the output dc-dc buck converter. To accomplish this, the dc bus voltage is monitored and the buck converter duty ratio is controlled to maintain the desired bus voltage.

C. Alternative Control

Time constraints limited the development of three-phase control schemes before ocean testing was scheduled for the wave energy converter prototype currently being developed at Oregon State University. To provide loading functionality in the short timeline, it was decided to leave the three-phase front-end uncontrolled and control electrical loading using only the dc-dc buck converter. When uncontrolled, the front-end operates as a passive diode-bridge rectifier.

To control electrical loading of the device under test, two methods of control were implemented on the dc-dc buck converter. The first method simply applies a user-defined fixed duty ratio to the buck converter. This effectively performs as a variable resistor connected to the dc output of the passive rectifier front-end. The second method of control implemented was a form of constant current control. By manipulating the duty ratio of the buck converter, the dc bus voltage was controlled to maintain a fixed input current space vector magnitude.

VI. Hardware Results

Ocean testing was performed on the wave energy converter prototype developed at Oregon State University using the PADA system for loading and data acquisition. Both the fixed duty ratio and constant current reference control schemes were utilized in testing.

Recording durations during ocean testing included both twenty minute and one hour time intervals. During the twenty minute data acquisition sessions, signals recorded included three-phase voltage and current, dc bus voltage, and duty ratio of the dc-dc buck converter. Data sampling during the twenty minute sessions was slowed to a 1ms sampling interval to conserve storage space. Electrical frequencies expected from the wave energy converter were below 30Hz, providing good resolution with the reduced sampling rate. A sample of data recorded during these twenty minute sessions using the fixed duty ratio control is shown in Fig. 7 and using the constant current reference control in Fig. 8. Note the current is referenced positive out of the PADA rectifier front-end.

The one hour acquisition sessions were conducted to record power output of the wave energy converter over an extended period of time. To conserve data storage space, the sampling interval was reduced to 10ms and the power was calculated in the acquisition model to allow the single power value to be recorded as opposed to three-phase voltage and current signals. A sample of data recorded during these one hour sessions using the constant current reference control is shown in Fig. 9.

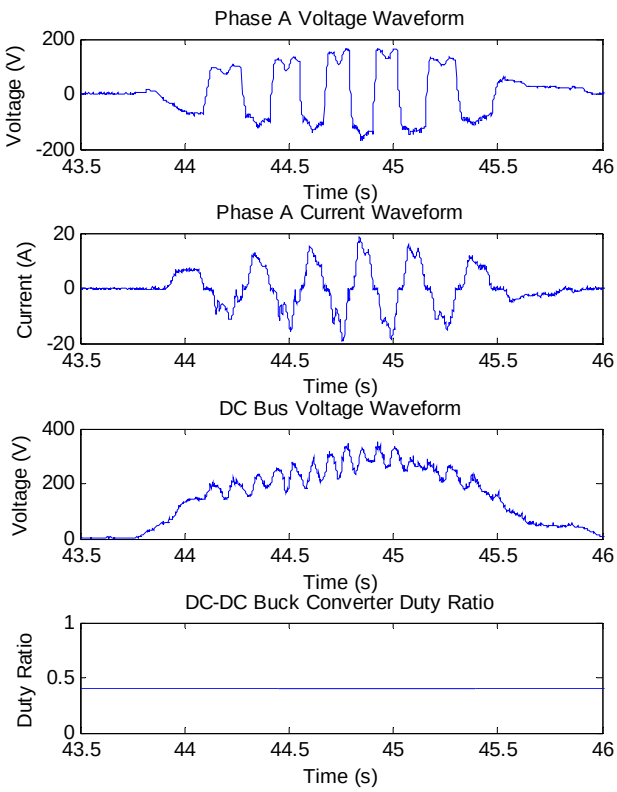

Fig. 7. Recorded waveforms with a fixed duty ratio of 0.4.

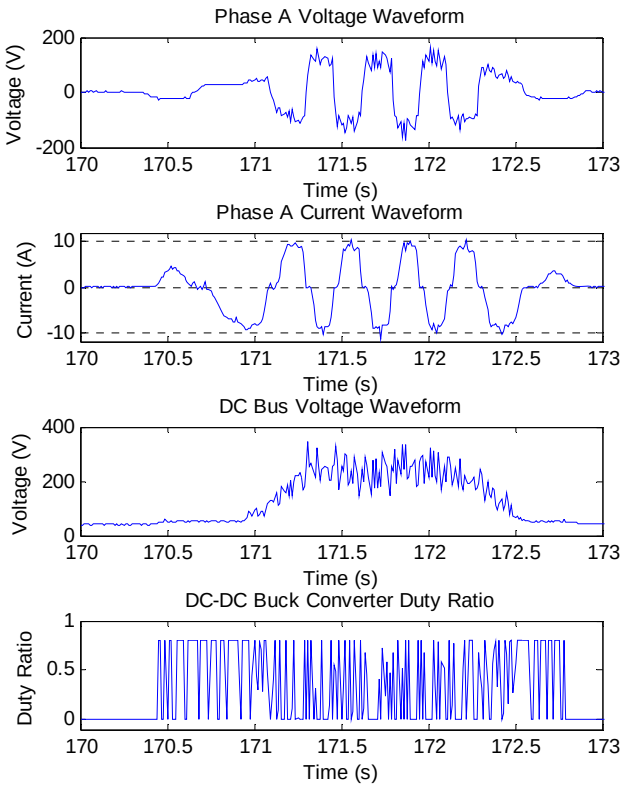

Fig. 8. Recorded waveforms with a 10A current reference.

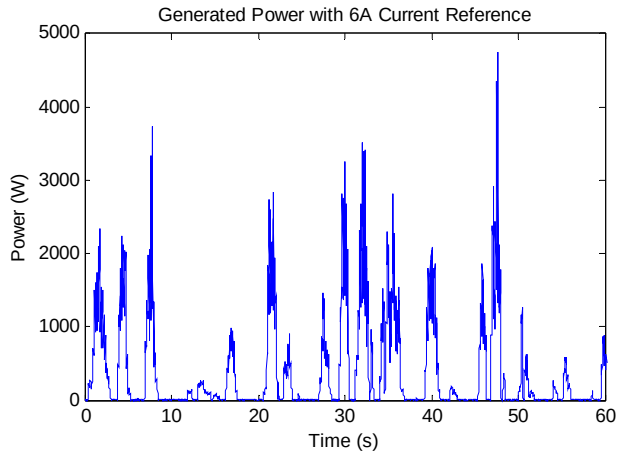

Fig. 9. Recorded power waveform with a 6A current reference.

VII. Conclusions

An inclusive system for the testing and characterization of ocean wave energy devices has been presented. Capabilities of the system's electrical loading and data acquisition components were demonstrated using results from the ocean testing of a wave energy converter prototype. The inclusion of a real-time, hardware-in-loop rapid prototyping system allows on-the-fly control system modifications and customization to ideally load and monitor a wave energy device under test. A universal power interface and sealed enclosure are ideal for allowing the characterization of prototype wave energy converters in the harsh ocean environment.

Future work will include design and testing of control systems for the three-phase active rectifier front-end. Development of this system is crucial to the comprehensive evaluation of future wave energy devices in a marine environment. The ability to test these devices under normal operating conditions in the ocean will allow optimum technologies to be identified to further advance the research of wave energy.

References

[1] J.W. Baek, M.H. Ryoo, J.H. Kim, J.S. Lai, "50kVA Regenerative Active load for power test system," presented at the 2007 European Conference on Power Electronics and Applications, Sept. 2-5, 2007.

[2] I.Y. Chung, D.J. Won, J.M. Kim, S.J. Ahn, S.I. Moon, J.C. Seo, J.W. Choe, "Development of Power Quality Diagnosis Systems for Power Quality Improvement," IEEE Power Engineering Society General Meeting, Vol. 2, July 13-17, 2003.