**Proceedings of Proceedings of OMAE2007**
**26th International Conference on Offshore Mechanics and Arctic Engineering**
**June 10-15, 2007, San Diego, USA**

**OMAE2007-29728**

# NUMERICAL AND EXPERIMENTAL MODELING OF DIRECT-DRIVE WAVE ENERGY EXTRACTION DEVICES

**David Elwood, Solomon Yim**
Dept of Civil, Construction and Environmental Engineering
Oregon State University
Corvallis, Oregon 97330

**Alex Yokochi**
Dept of Chemical Engineering
Oregon State University
Corvallis, Oregon 97330

**Ken Rhinefrank, Joe Prudell, Al Schacher, Peter Hogan, Aaron Vander Muelen, Annette von Jouanne, Ted Brekken**
Dept of Electrical Engineering and Computer Sciences
Oregon State University
Corvallis, Oregon 97330

## ABSTRACT
The solutions to today's energy challenges need to be explored through alternative, renewable and clean energy sources to enable a diverse national energy resource plan. An extremely abundant and promising source of energy exists in the world's oceans in the forms of wave, tidal, marine current, thermal (temperature gradient) and salinity. Among these forms, significant opportunities and benefits have been identified in the area of wave energy extraction. Waves have several advantages over other forms of renewable energy such as wind and solar, in that the waves are more available (seasonal, but more constant) and more predictable, thus enabling more straightforward and reliable integration into the electric utility grid. Wave energy also offers higher energy densities, enabling devices to extract more power from a smaller volume at consequent lower costs. However, many engineering challenges need to be overcome to ensure wave energy device survivability, reliability and maintainability, in addition to efficient and high quality power take-off systems. Optimizing wave energy technologies requires a multi-disciplinary team from areas such as Electrical, Chemical, Ocean, Civil and Mechanical Engineering, to enable innovative systems-level research and development.

This paper presents some recent research developments on experimental and numerical modeling on direct-drive approaches and the associated devices designed to convert the motion of the ocean waves into electrical energy using point absorber wave energy converters. This research is focused on a simplification of processes, i.e., replacing systems using intermediate hydraulics or pneumatics with direct-drive approaches to allow generators to respond directly to the movement of the ocean by employing magnetic fields for contact-less mechanical energy transmission, and power electronics for efficient electrical energy extraction. The term "direct" drive describes the direct coupling of the buoy's velocity and force to the generator without the use of hydraulic fluid or air.

The wave energy buoy and spar are designed to efficiently capture ocean wave energy and transfer it to the generator. These buoys have been tested at the Oregon State University O.H. Hinsdale Wave Research Laboratory, with planned testing off the coast of Oregon.

The paper will examine several direct-drive approaches, including electrical and mechanical design characteristics, describe the numerical modeling of the associated conceptual devices, prototype testing, and some ongoing research on the dynamics of buoy generator systems for design optimization.

## INTRODUCTION
Modern ocean wave energy research began during the oil crisis of the 1970s. Much of the early work was conducted in Europe by Salter [23] and Evans [7] in England and Falnes [8] in Norway, amongst others. Several promising concepts were developed by 1980 including point absorber wave energy converters such as the infamous Salter duck [23] and oscillating water column (OWC) devices utilizing a Well's turbine for power take-off. With the decrease in oil prices in the early 1980s much of the funding for ocean wave energy conversion was cut and no full scale demonstrations of the technology were constructed. Recently concerns about global warming and the increasing price of conventional energy have led to resurgence in research on ocean wave energy conversion.

 Copyright © 2007 by ASME

Currently several commercial developers are working to build grid connected wave energy conversion systems. These include the oscillating water column device, Limpet, installed on the Isle of Islay off Scotland in 2000 [13], and the Pelamis wave energy conversion system to be deployed off the coast of Portugal in the spring of 2007 [12]. In the United States, Ocean Power Technologies (OPT) has developed a point absorber wave energy conversion buoy for the US Navy with a test buoy deployed off Oahu, Hawaii [14]. OPT has plans to deploy an array of point absorber buoys off the coast of Reedsport, Oregon representing the first grid connected wave energy conversion plant in the United States.

## Problem Definition

Research at Oregon State over the past several years has focused on the direct coupling of point absorber type wave energy conversion devices with electrical generators. Currently most wave energy conversion systems have an indirect coupling between the wave displacement and the electrical generator utilizing either hydraulics or compressed air. By directly coupling the motion of the waves to an electrical generator the overall conversion efficiency can be greatly increased. Use of direct drive technologies also reduces the number of moving parts in the system and can lead to decreased maintenance costs.

In order to directly couple the mechanical energy of ocean waves with an electrical generator a system utilizing a cylindrical deep draft spar buoy and a free floating cylindrical outer float is utilized. The relative heave motion between the two floating bodies is then converted into electricity utilizing one of several direct drive linear generators developed at OSU. In order to optimize the wave energy conversion system the response of the spar and buoy in ocean waves must be determined and coupled with an electromagnetic model of the linear generator. This model must have the ability to calculate the buoy and spar response in real time in order to allow for active control of the generator in random seas.

## Equations of Motion

A sketch of the two body point absorber wave energy converter system being investigated in the ongoing research can be seen in Figure 1. The relative motion of the outer buoy and the central spar is converted into electricity through the use of either a linear generator or a linear to rotary mechanism directly driving a rotary generator. The 6-DOF equations of motion of the buoy and spar are comparable to those used for the motions of other floating structures [9, 20]. In matrix form the equations of motion can be written as,

$$(M + A)\ddot{\eta} + B\dot{\eta} + C\eta = F_W + F_w + F_g + F_f \qquad (1)$$

where

$\eta$ = 6DOF Response (Surge, Sway, Heave, Roll, Pitch, Yaw)
M = 6X6 Mass Matrix
A = 6X6 Added Mass Matrix
B = 6X6 Damping Matrix
C = 6X6 Stiffness Matrix
$F_W$ = Wave Forcing
$F_w$ = Wind Forcing
$F_g$ = Generator Forcing
$F_f$ = Sliding friction between SPAR and Buoy

If uni-directional waves are assumed with the x-axis pointed toward the direction of the incoming wave train then the sway and roll of the two bodies can be assumed to be small. In addition the symmetry on the two cylindrical floating bodies enables the yaw motion of the spar and buoy to be neglected. Assuming that the pitch of the buoy and the spar is decoupled from the surge and heave, the three remaining degrees of freedom can be decomposed into the surge, pitch and heave of each floating body as shown in Eqs.(2-4) (Spar) and (5-7) (Buoy).

**Figure 1: Sketch of two body point absorber wave energy converter**

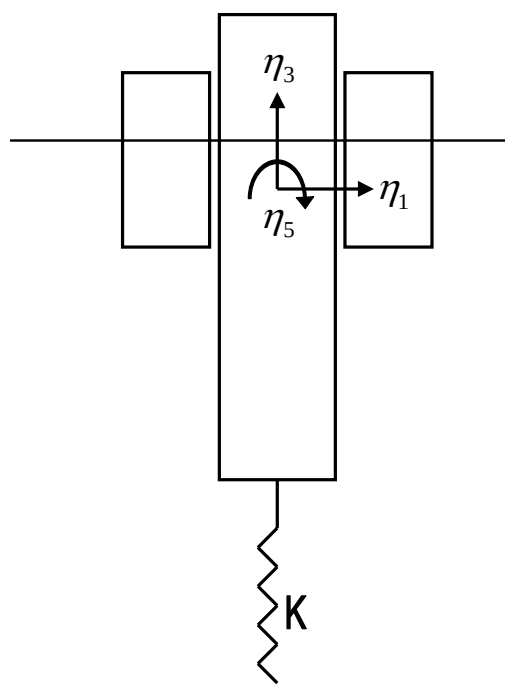


$$(m_{11} + a_{11})\ddot{\eta}_1 + b_{11}\dot{\eta}_1 + k((\eta_1^{\,2} + d^2)^{1/2} - d) = F_{W1} + F_{w1} + F_{B1} \qquad (2)$$

$$(m_{55} + a_{55})\ddot{\eta}_5 + b_{55}\dot{\eta}_5 + c_{55}\eta_5 = F_{W5} + F_{w5} \qquad (3)$$

$$(m_{33} + a_{33})\ddot{\eta}_3 + b_{33}\dot{\eta}_3 + (c_{33} + k)\eta_3 = F_{W3} + F_{w3} + F_{f3} \qquad (4)$$


Copyright © 2007 by ASME

where

k = Effective Mooring Stiffness
d = Water Depth
$F_{B1}$ = Horizontal Force Exerted on the Spar by the Buoy

$$(m_{11} + a_{11})\ddot{\eta}_1 + b_{11}\dot{\eta}_1 = F_{W1} + F_{w1} + F_{S1} \quad (5)$$

$$(m_{55} + a_{55})\ddot{\eta}_5 + b_{55}\dot{\eta}_5 + c_{55}\eta_5 = F_{W5} + F_{w5} \quad (6)$$

$$(m_{33} + a_{33})\ddot{\eta}_3 + b_{33}\dot{\eta}_3 + c_{33}\eta_3 = F_{W3} + F_{g3} + F_{f3} \quad (7)$$

where

$F_{S1}$ = Horizontal Force Exerted on the Buoy by the Spar

By using a taught mooring system for the central spar the heave of the spar can be assumed to be zero. Assuming that the surge and pitch response of the system is small then the relative heave motion between the central spar and the outer buoy can be modeled with a one degree of freedom model of the outer buoy as given in Eq.(7). The use of water lubricated linear bearing materials between the spar and the buoy mitigate the frictional losses in the system. The frictional force between the buoy and the spar ($F_f$) was assumed to be small and was not included in the numerical model.

### Numerical Modeling and Physical Testing

Having derived the single degree of freedom equations of motion for a point absorber wave energy conversion system a numerical model can be constructed in order to provide valuable information about the system performance required to solve the problems posed in the introduction. In order to create such a numerical model an electro-magnetic model of the electrical generator must be coupled with a hydrodynamic model of the buoy in order to accurately predict the response of the system. The remainder of this paper will describe the electro-magnetic modeling of two such direct drive generators and the use of a numerical wave tank to model the hydrodynamics of the system. This paper will also present some preliminary physical testing of the proposed direct drive systems in the O.H Hinsdale wave research laboratory.

## SYSTEMS CONSIDERED

Over the past six years several innovative direct drive generator technologies have been developed for use in wave energy conversion by the Motor Systems Research Laboratory at Oregon State University. These direct drive generators use electro-magnetic coupling to convert the relative motion between a heaving buoy and a stationary central spar into electricity. By directly coupling the relative motion of the buoy and spar without intermediate hydraulics the electrical generation efficiency can be increased and the overall system simplified. In this paper two such direct drive generator concept will be described; a permanent magnet linear generator system and a contact-less linear to rotary transmission system driving a rotational generator.

### Permanent Magnet Linear Generator Wave Energy Conversion System

The first direct drive wave energy conversion system considered incorporates a permanent magnet linear generator housed within a single heaving buoy. The system consists of a permanent magnet field system mounted on a central shaft, coupled to the floating buoy via a spring and an armature rigidly connected to the buoy structure. The central shaft is moored to the seafloor and the buoy is free to heave. The relative motion created by the heave displacement between the central magnetic shaft and the armature induces voltage in the armature [21].

**Figure 2: Solid Model of Single Buoy Permanent Magnet Linear Generator Wave Energy Conversion System**

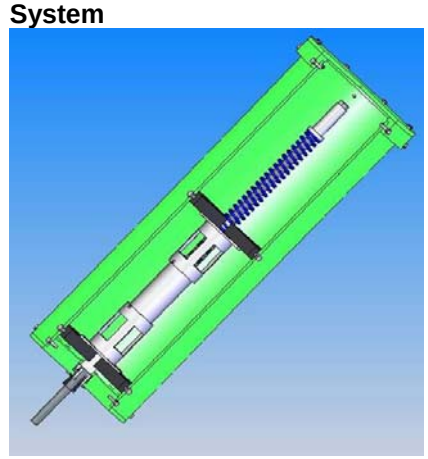

The translator shaft consists of an assembly of high permeability steel pole tip pieces designed to effectively allow for the flow of magnetic flux and high field strength neodymium-iron-boron magnets with their poles placed in opposition to effectively concentrate the available flux. Lamination steel is then wrapped around the two-phase armature coils to provide the flux return path through the generator. Figure 3 shows a partial cross section of the generator magnetic circuit.

### Contact-less Force Transmission System

Another potential direct drive generator solution is a contact-less force transmission system utilizing a ball screw driving a conventional rotary generator. The contact-less transmission uses magnetic fields to transfer thrust from an outer buoy to a central spar without any direct mechanical coupling. This approach minimizes the number of moving parts and decreases the losses in the force transmission [1].


Copyright © 2007 by ASME

**Figure 3: Partial Cross Section of Linear Generator Magnetic Circuit**

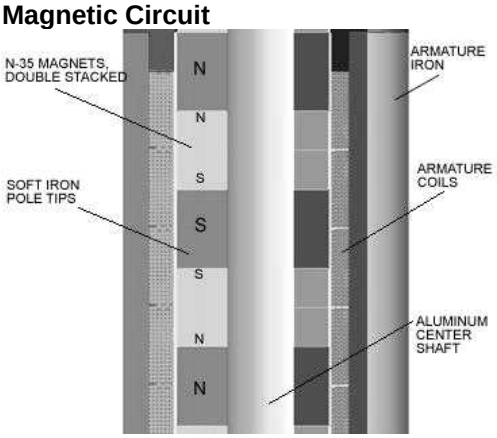


The solid model of the overall buoy system is shown in Figure 4 with components such as the CFTS, ball screw and ball nuts displayed in the section view. The system comprises an outer float enclosing a ferromagnetic cylinder which slides against an inner module that contains the power take off components. The inner and outer modules are independently sealed. The force on the outer cylinder is transmitted through the wall of the inner module to the ball nut by the magnetic fields of the CFTS.

**Figure 4: Solid Model of Contact-less Force Transmission Wave Energy Conversion System**

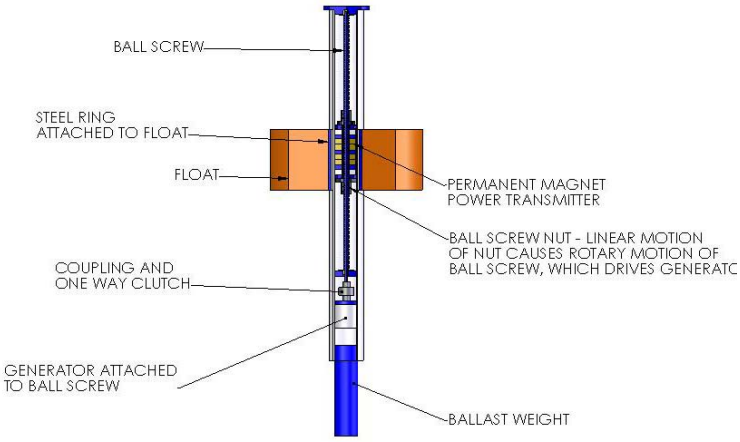


The CFTS is a tubular ferromagnetic reluctance device of two components. The first component consists of neodymium-iron-boron (NdFeB) magnets which are axially magnetized and configured in a "piston" with two opposing poles squeezing magnetic flux radially through a central pole piece into the back-iron "cylinder" (the second component) which is mounted on the buoy. The reluctance force that is developed when the buoy moves up and down is transmitted to the piston through the magnetic field between these two components.

A ball screw comprises a shaft with inclined threaded groove and a nut that is concentric to the shaft with the nut containing small cylindrical steel balls (see Figure 5). Traditionally ball screws are used to convert rotational motion to linear motion. By spinning the shaft in either direction, the nut moves linearly up or down the length of the shaft, thus converting rotary to linear motion in a process called forward driving. Alternatively, as the nut is pulled up or down, the shaft rotates in the clockwise or counterclockwise direction respectively, thus converting linear to rotary motion.

**Figure 5: Ball Screw Arrangement to Covert Linear to Rotary Motion**

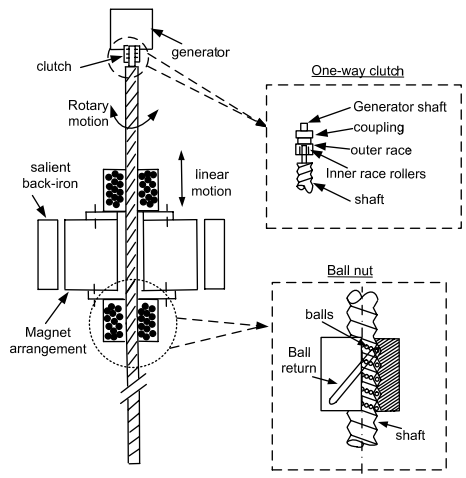


## NUMERICAL SIMULATION

In order to model the wave energy conversion system numerically an electro-magnetic model of the power take off system must be coupled to a hydrodynamic model of the buoy and spar system.

### Permanent Magnet Linear Generator

The electrical production from the linear generator can be modeled using an equivalent electrical and an equivalent magnetic circuit as shown in Figure 6. Using these two equivalent circuits the voltages and currents in each of the two phases of the generator can be determined analytically. Having determined the position and velocity of the buoy relative to the spar from the previous time step the generator force for the current time step can be calculated, added to the hydrodynamic force and used to determine the new buoy acceleration, velocity, and displacement.


Copyright © 2007 by ASME

**Figure 6: Equivalent Electrical and Magnetic Circuits for Permanent magnet Linear Generator**

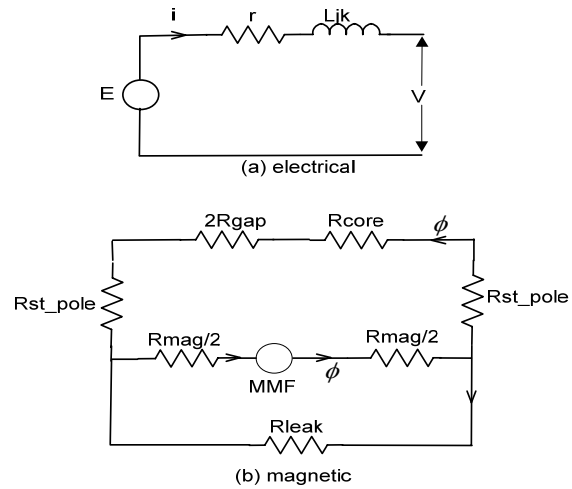


The voltages of the stator phases A and B can be obtained from the following equations,

$$v_j = -r_j i_j + \frac{d\lambda_j}{dt} \qquad j = 1,2 \tag{8}$$

$$\lambda_j = \sum_{k=1}^{2} L_{jk} i_k + \lambda_{jf}$$

where

r = phase resistance
$i_j$ = current of *j-th* phase
$\lambda_{jf}$ =flux linkage in phase j due to the magnet
$L_{jk}$ , *j,k=1,2* are self (j=k) and mutual (j≠k) inductances.

The flux linkage due to the permanent magnet depends on the pole pitch and the displacement. The maximum flux linkage occurs when the axis of the coil is aligned with that of the soft iron pole. Under these conditions we have maximum emf at peak linear speed. With the pole pitch fixed at 40mm, the flux linking a coil is dependent on the relative motion between the translator shaft and stator.

The emf of a phase is given by

$$E_j = \frac{d\lambda_{jf}}{dt} = \frac{d\lambda_{jf}}{dz}\frac{dz}{dt} \tag{9}$$

where

$\lambda_{1f} = N\phi_1 = N\hat{\phi}\cos(\frac{\pi}{\tau}z)$ = flux linkage of phase A (note phase B is shifted by 90 degrees)

$z$ = displacement of the translator relative to the stator
$\tau$ = pole pitch of the generator
$N$ = number of turns in phase
$\hat{\phi}$ =peak flux

Expanding Eqs.(1) and (2) and simplifying, we have for example for phase A:

$$v_1 = -r_1 i_1 + L_{11}\frac{di_1}{dt} + L_{12}\frac{di_2}{dt} + \frac{d\lambda_{1f}}{dt} \tag{10}$$

$$E_1 = \frac{d\lambda_{jf}}{dt} = -N\hat{\phi}\frac{\pi}{\tau}\sin\left(\frac{\pi}{\tau}z\right)\frac{dz}{dt} \tag{11}$$

Hence the current of phase A can be obtained from Eq.(5):

$$\frac{di_1}{dt} = \frac{1}{L_{11}}\left(v_1 + r_1 i_1 - L_{12}\frac{di_2}{dt} - E_1\right) \tag{12}$$

**Contact-less Force Transmission Ball Screw to Rotary Generator**

In order to model the power generation for the contact-less force transmission wave energy conversion system a numerical model of the ball screw arrangement must be derived and coupled to a rotational electrical generator. The torque developed in the rotary generator must be related to the linear force transferred from the outer buoy to the inner spar through the contact-less force transmission system.

The relationship between the torque on the shaft $T_{screw}$ and the axial force $F_{screw}$ for the ball screw is given by,

$$T_{screw} = \frac{lF_{scew}}{2\pi\eta_f} \text{ (forward driving)} \tag{13a}$$

$$T_{screw} = \frac{lF_{scew}}{2\pi}\eta_b \text{ (back driving)} \tag{13b}$$

where

$l$ = screw lead [m/rev]
$\eta_f$ = forward driving efficiency
$\eta_b$ = back driving efficiency

The generator acts as a brake, opposing the rotation with a torque on the shaft that can be expressed as,

$$T_{screw} = K_T\Omega + T_0 \tag{14}$$


Copyright © 2007 by ASME

where

$T_0$ = the loss torque [Nm]
$K_T$ = the braking coefficient of the generator [Nms/rad]
$\Omega$ = angular velocity of the shaft

If a permanent magnet synchronous generator (PMSG) is used the introduction of the constant $K_T$ effectively assumes a linear magnetic circuit with no saturation of the rotor and stator iron. With the relatively large effective air gaps (of the magnets themselves) that are common in permanent magnet generators, this assumption would not lead to significant errors.

The total power take-off force during the upstroke is then given by,

$$F_{screw} = \frac{2\pi}{l}(K_T\Omega + T_0 + I_{mG}\alpha) \tag{15}$$

where

$I_{mG}$ = the moment of inertia of the generator, shaft and roller screw system

$$\Omega = \dot{z}\frac{2\pi}{l}$$

$$\alpha = \frac{d\Omega}{dt} = \ddot{z}\frac{2\pi}{l}$$ (the angular acceleration of shaft)

The generator damping coefficient is then given by,

$$b_G = K_T\left(\frac{2\pi}{l}\right)^2 \tag{16}$$

Because the generator is decoupled, during the down stroke, there is no axial force from the power take-off on the buoy. The generator "free wheels", i.e. it is decelerated by the electrical load connected to it, its own inertia and that of the shaft through the unidirectional clutch. We then have $F_{screw} = 0$ as shown by,

$$I_{mG}\alpha + T_{screw} = 0 \tag{17}$$

The equivalent circuit of the permanent magnet synchronous generator is shown in Figure 7. The voltage across a phase of the generator windings can be expressed as ,

$$v_j = -r_j i_j + L_j\frac{di_j}{dt} + \frac{d\lambda_{jf}}{dt},$$

(18)
where

$r_j$ = phase resistance
$i_j$ = current of *j-th* phase
$\lambda_{jf}$ =flux linkage in phase j
$L_j$ = phase inductance

**Figure 7: Equivalent Circuit of the Permanent Magnet Synchronous Rotary Generator**

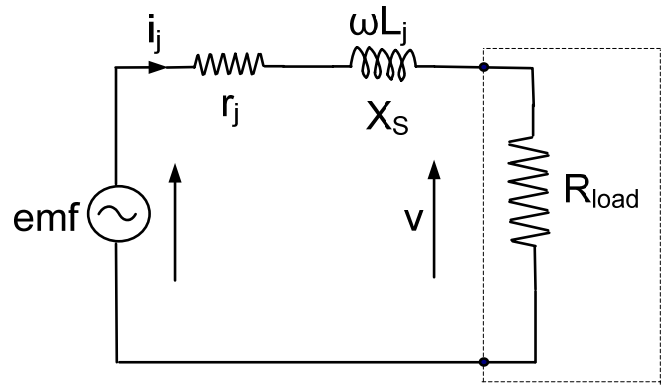


**Hydrodynamic Model**

In order to determine the hydrodynamic forces on the floating buoy a commercial CFD code, Comet, a CDAdapco product, was used. Comet uses as its governing equation the Reynolds Average Navier Stokes Equations as its fundamental governing equations. The integral form of these governing equations is given by,

$$\frac{d}{dt}\int_V \rho u_i dV + \int_S \rho u_i (v - v_s) ds = \int_S (\tau_{ij} - p) ds + \int_V \rho g dV \tag{19}$$

$$\frac{d}{dt}\int_V \rho dV + \int_S \rho (v - v_s) ds = 0 \tag{20}$$

where

$v_s$ = surface velocity of cell volume
$v$ = continuum velocity
$V$ = volume bounded by a closed surface S
$g$ =acceleration due to gravity

$$\tau_{ij} = \mu_{eff}\left(\frac{\partial u_i}{\partial x_j} + \frac{\partial u_j}{\partial x_i}\right)$$ (the effective stresses)

$\mu_{eff}$ = effective dynamic viscosity of the fluid

**Figure 8: Control Volume Used by the Comet Solver**


Copyright © 2007 by ASME

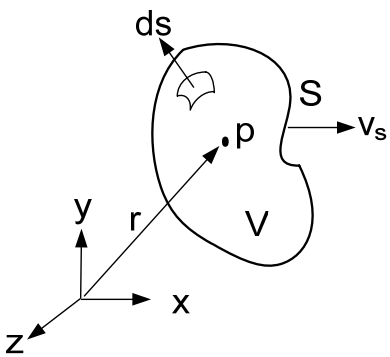


A definition of the control volume used by Comet can be seen in Figure 8. The numerical method used by Comet is of the unstructured finite type. The code also allows for multiple meshing schemes in various regions of the fluid domain that are allowed to translate against one another. This allows for a finer mesh near an area of interest with a coarser mesh in the majority of the fluid domain, increasing the efficiency of the technique. These moving grids require a space conservation law which can be written as,

$$\frac{d}{dt}\int_V dV - \int_S v_s ds = 0$$

(21)

A typical numerical grid used in the modeling of a single heaving buoy can be seen in Figure 9.

**Figure 9: Typical Mesh Used for Modeling a Single Heaving Buoy**

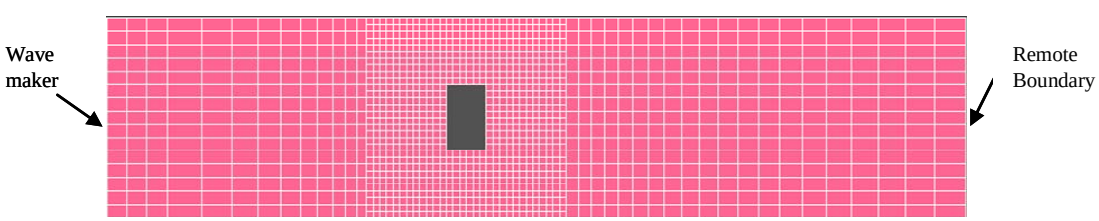


In order to create a numerical wave tank using Comet the solution domain was bounded by a horizontal piston type wave maker at the left boundary of the solution domain. At this boundary the water particle velocity is constrained to be that of the horizontally translating wave maker.

The other boundaries of the solution domain are along the side walls of the tank and are considered to be an impermeable no-slip boundary. A similar boundary condition was applied to the surface of the buoy with the motion of the buoy rigidly constrained in all degrees of freedom except for the vertical (heave) direction.

Traditionally numerical wave tanks have used a non-reflective boundary at the far end of the solution domain in order to absorb the wave energy and prevent reflection. Since this type of boundary was not available for use in the far field boundary must be located far enough away from the region of interest and simulation time chosen in such a way to avoid reflections. Also, the cell volumes located towards the boundaries are made larger and this provided some damping of the waves at the boundaries.

The waves generated by the numerical wave maker can be assumed to be those of a physical piston type wave maker as given by,

$$\phi = \frac{4s\tanh kh \sinh kh}{\omega(2kh + \sin 2kh)}\cosh k(z+h)\cos(kx - \omega t) \quad (22)$$

$$\eta(x,t) = -\left.\frac{\partial\phi}{\partial t}\right|_{z=0} = \frac{4s\sinh^2 kh}{2kh + \sinh 2kh}\sin(kx - \omega t) \quad (23)$$

where

$\phi$ = velocity potential
$\eta$ = surface elevation
k = wave number
h = water depth
w = wave frequency

The air and water in the solution domain are replaced by an "effective fluid" whose properties depend on the physical properties of the constituent fluids and a scalar indicator function, known as the volume fraction, *c*. The volume fraction is assigned a value of one (1) for cells filled with water and a value of zero (0) for cells filled with air. The transport equation is solved for the volume fraction using computed values of the velocity field:

$$\frac{d}{dt}\int_V c \cdot dV + \int_S c \cdot (v - v_s) \cdot dS = 0 \quad (24)$$

where


Copyright © 2007 by ASME

$v$ = particle velocity
$v_{s.}$ = characteristic velocity of the fluid
$V$ = cell volume
$S$ = area of cell face.

### Coupling of Hydrodynamic and Electro-Magnetic Models

Using the hydrodynamic forcing and damping calculated by Comet the dynamics of the coupled buoy generator system can be calculated by means of Eq.(7). In this solution approach the mechanical friction between the outer buoy and the central spar are neglected. A Fortran code has been developed that numerically couples the electro-magnetic model in Matlab Simulink with the hydrodynamic model in Comet. This technique can be viewed as a form of "soft" coupling between the hydrodynamic and electro-magnetic models. A block diagram of the coupling technique can be seen in Figure 10.

**Figure 10: Block Schematic of Coupling Algorithm**

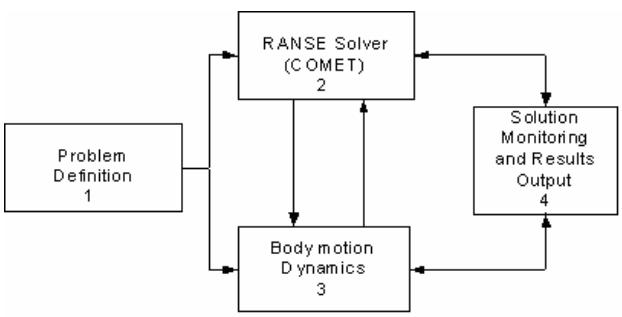


## RESULTS

By coupling together a commercial CFD code with an analytical model of an innovative direct drive electrical generator the performance of a single point absorber wave energy conversion device was simulated. Having successful simulated the performance of a single wave energy conversion buoy further simulations were conducted with two buoys in order to evaluate the interactions between multiple wave energy converters functioning in an array.

In order to provide a proof of concept of the direct drive technology small scale wave energy conversion system have also been tested in the long wave flume at the O.H. Hinsdale wave research laboratory. The demonstrations gave useful insight into design problems for future devices. This section with present some of the results of the numerical simulation and wave flume testing.

### Numerical Simulation of a Single Wave Energy Converter

A soft-coupled numerical model of a two body wave energy converter with a contact-less force linear to rotary transmission driving a rotary generator was developed using the method described in Section 3. In the hydrodynamic model a single cylindrical buoy is used to represent the outer float in the two body system. A 1/100 scale model of a typical system with a 3.5 m diameter outer float was modeled in order to investigate the performance of the system in regular waves.

Due to limitations on the length of the numerical wave tank and the inability to use a non-reflective boundary in Comet only 30-40 seconds of data could be generated per run. The power generated in a typical run with $Hs$ = 0.15 and $T$ = 1.5s can be seen in Figure 11.

The overall efficiency of the device wave calculated over a range of wave heights and periods with a maximum calculated efficiency of 37%. This is well below the theoretical limit of 50% for a point absorber as predicted by Evans. In these simulations, however, the loading from the rotary generator is held constant. Is this loading is controllable it may be possible to optimize the generator loading and achieve high efficiencies over a broad range of wave environments. Typical conversion efficiencies in various waves can be seen in Table 1.

**Table 1: Typical Conversion Efficiency**

| T | Hs | P | Pin | Efficiency |
|---|---|---|---|---|
| s | m | W | W | % |
| 1.5 | 0.15 | 5 | 20 | 24.7 |
| 2 | 0.15 | 10 | 27 | 37.0 |
| 2.5 | 0.15 | 4.5 | 34 | 13.3 |
| 2.5 | 0.6 | 50 | 540 | 9.3 |
| 3 | 0.15 | 1.4 | 41 | 3.5 |
| 4 | 0.15 | 0.6 | 54 | 1.1 |

**Figure 11: Typical Power Production in Regular Waves, Hs = .15 m, T=1.5 seconds**

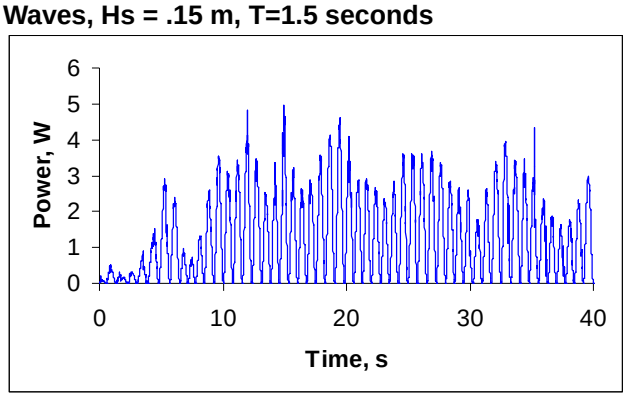


### Numerical Simulation of Two Wave Energy Converters

A limited study of the interactions between two wave energy converters located in line was conducted in order to investigate the behaviors of such devices in an array. The period of the wave forcing and the spacing of the buoys were both found to effect the interactions between the two buoys. Figure 12


Copyright © 2007 by ASME

illustrates the influence of period on the heave displacement of each buoy for a constant spacing.

**Figure 12: Heave displacement of double buoy array Hs= 0.15m, (a)T=1.5s (b) T=2s (c) T=2.5s**

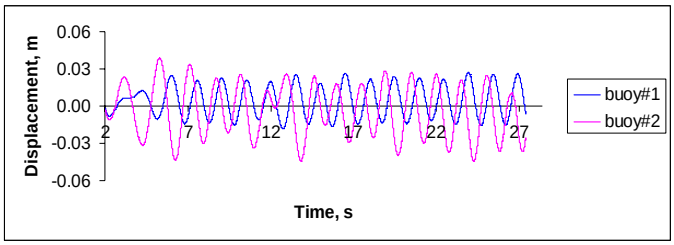


(a)

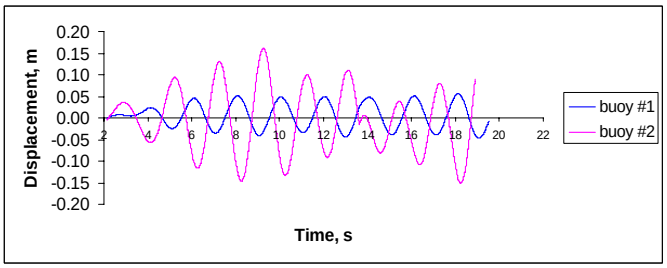


(b)

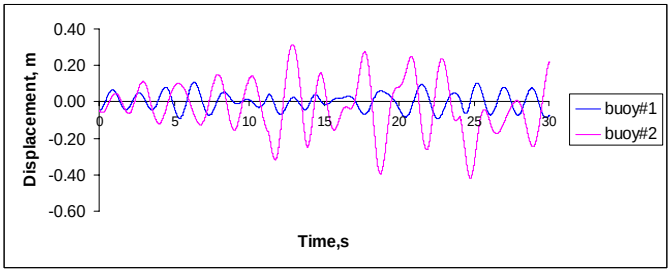


(c)

It was noted that if the spacing and period were tuned correctly the two converters could be made to heave 90 degrees out of phase with one another. This would provide a near constant power from the two buoy system in contrast to the varying power supplied by a single buoy as can be seen in Figure 13.

## Physical Testing

As a proof of concept a two body system with a linear to rotary contact-less force transmission an a rotary generator was tested in the O.H. Hinsdale Wave Research Laboratory, with a slack-mooring configuration and a drag plate connected to the base of the spar. Provisions were also made for varying the total mass of the buoy by inserting weights into three equilaterally placed pvc tubes in the float. Figure 14 shows the configuration in the long wave flume of the O.H. Hinsdale wave research laboratory. Figure 15 gives the typical electrical production of the test system.

**Figure 13: Instantaneous Power Generated by Two Wave Energy Converters**

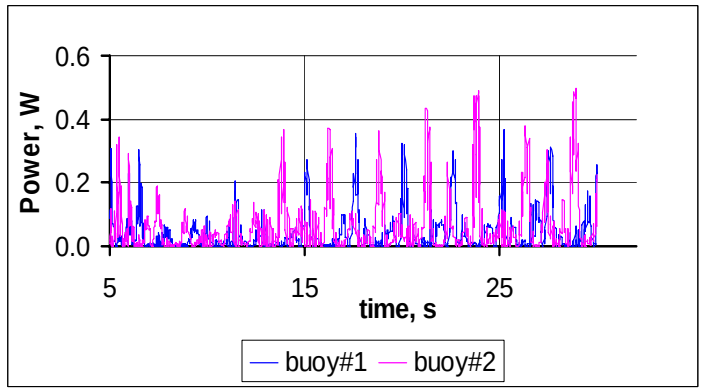


**Figure 14: Slack-moored OWEC under test in O.H. Hinsdale Wave Research Lab**

Copyright © 2007 by ASME

**Figure 15: Generator Voltage, Current and Power During Testing at O.H Hinsdale**

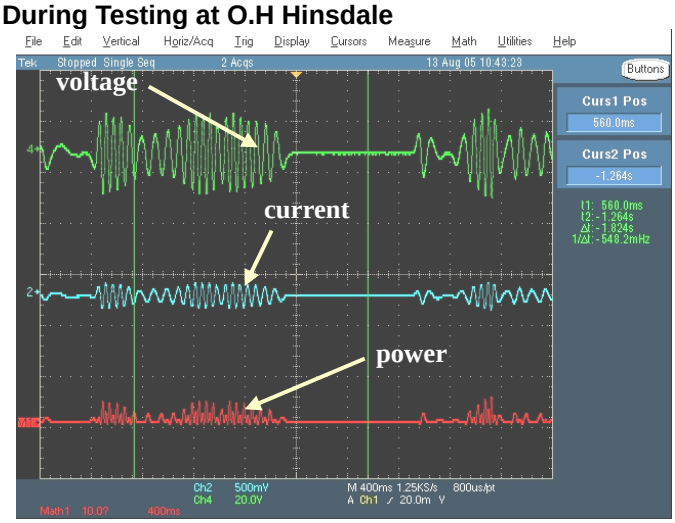


## CONCLUSIONS AND FUTURE WORK

Application of direct drive electrical generation technologies for wave energy conversion has the potential to increase the efficiency of wave energy conversion systems by eliminating the need for hydraulic or pneumatic coupling between the motion of the waves and the electrical generator. Several innovative direct drive generators have been developed for use in point absorber wave energy conversion systems. The modeling of these systems requires a coupling of a hydrodynamic model describing the wave forcing, damping, and inertia with an electro-magnetic model of the electrical generation system. In this paper such a coupled model was described that integrates a numerical wave tank built using a commercial CFD code with an analytical model of a direct drive electrical generation system in order to determine the performance characteristics of a single wave energy converter and the interactions between two in line wave energy converters.

Use of computational fluid dynamics to model the hydrodynamics of a heaving buoy indicates the potential for accurately capturing the non-linear nature of the wave forcing and the interactions between multiple devices. Its usefulness in the coupled analysis of the hydrodynamic/electro-magnetic system is unclear since a large amount of computational effort is required for relatively short simulations. In order to ensure statistically significant results a large number of replicates of a random time series would be required further increasing the required computation time. It is safe to say that for the immediate future, computing technology would not provide the real-time modeling required to optimize the control algorithms for electricity generation in a real seaway.

The physical testing of various direct drive concepts has provided valuable insight into the design issues for wave energy conversion systems. The importance of the mooring system design and its effect on the system dynamics, most notably the surge response, has been noted and requires future research. It may also not be appropriate to assume that the pitch motion of the system is small depending on the mass and stiffness characteristics of the wave energy converter. This indicates that a 3-DOF model of the system may be required in order to better understand the system performance.

From the results of the simulation conducted using a coupled hydrodynamic and electromagnetic model utilizing CFD it is clear that there may be strong non-linearities in the system dynamics. As such a linear model, while attractive for its computation efficiency, may not be appropriate for modeling these sorts of wave energy conversion systems. This should not be surprising since the highest system efficiency can be achieved when the response is resonant and large response amplitudes should be expected. The hydrodynamic interaction between the spar and the outer buoy is also not well understood and has the potential to introduce large viscous effects. As a result, conventional approaches to calculate the added mass and damping of the floating bodies may not be appropriate.

In an effort to develop an efficient hydrodynamic model, capable of real-time simulation for use in the optimization of the electronic control algorithm an effort is underway to develop a non-linear Morison model that can be calibrated with experimental data. In support of this effort a series of model tests is planned in order to determine the hydrodynamic damping, added mass, and wave forcing on a two body point absorber type wave energy converter. Testing of a 1KW wave energy conversion system in the open ocean is also planned in order to validate the numerical models.

Another potential issue for wave energy conversion devices that has yet to be considered is their long term fatigue life. Traditionally floating systems designed for oil and gas exploration and production are designed to minimize motions in a seaway. Nevertheless ensuring adequate fatigue lives for their structural components, mooring, and riser systems in challenging. The design of point absorber wave energy conversion systems works to maximize the motions of similar floating structures. Designing such structures and their mooring systems for an economic service life will provide another design problem for ocean wave energy converters.

In order to account for the effects of life-time damage in the design of such devices even more efficient means of modeling their performance will be required. To ensure adequate fatigue lives for the buoy structures and the mooring lines super-real time simulation will be required. For this type of analysis the benefits of a frequency domain solver for the coupled buoy and generator dynamics problem would be very attractive. In order to use such a frequency domain approach more research would


Copyright © 2007 by ASME

be required into the degree that a linearized model can predict the long term damage in these potentially non-linear systems.


## ACKNOWLEDGEMENTS

This paper is a summary of many years of research through the Motor Systems Resource Facility. As such we would like to acknowledge the work of Dr. Emmanuel Agamloh and Ganesh Gore and Dr. Allan Wallace who were instrumental in the research presented in this paper. We would also like to thank the Department of Energy and our industry partner Columbia Power Technologies for their support of our research.


## REFERENCES


[1] Agamloh E.B., *A direct-drive wave energy converter with contact-less force transmission system*, Ph.D. Dissertation, Oregon State University, Corvallis, 2005.

[2] Azcueta R., I. Hadzic, S. Muzaferija, M. Peric, "Computation of flows with free surface, "*1st MARNET CFD Workshop*, Barcelona, 1999

[3] Azcueta R., *Computation of Turbulent Free-Surface flows around ships and Floating Bodies*, PhD Thesis, Technischen Universitat Hamburg – Harburg, 2001.

[4] Budal K., "Theory for absorption of wave power by a system of interacting bodies," *J of Ship Research*, Vol 21, 1977, pp248-253.

[5] CCM GmbH, *Comet v.2 User Manual*, Germany, 2001

[6] Dean R.G., and R.A. Dalrymple "*Water wave Mechanics for Engineers and Scientists*", World Scientific, 1991

[7] Evans D.V., "Some theoretical aspects of three dimensional wave energy absorbers," *Proc. First Symposium on Wave Energy Utilization*, Chalmers University of Technology, Gothenburg, Sweden, 1979, pp 77-106.

[8] Falnes J., *Ocean Waves and oscillating Systems*, Cambridge University Press, 2002.

[9] Faltinsen, O.M, "Sea Loads on Ships and Offshore Structures," Cambridge University Press, 1999

[10] Gore G, "Scaled modeling and Simulation of Ocean Wave Linear Generator Buoy Systems," Masters Thesis, Oregon State University, Corvallis, 2006

[11] Hornreich R. M., and S. Shtrikman, "Optimal design of synchronous torque couplers," *IEEE Transactions on Magnetics*, vol. MAG-14, no. 5 September 1978.

[12] http://www.oceanpd.com/

[13] http://www.oceanpowertechnologies.com/

[14] http://www.wavegen.co.uk

[15] Jang M.J., K.C Lin, C.L. Chen "Modeling and position control of a ball screw stage," Proc., *IEEE International Conference on Networking, Sensing and Control*, Taipei, Taiwan, March 2004.

[16] McIver P., Some hydrodynamic aspects of arrays of wave-energy devices, Applied Ocean Research, Vol 16, 1994, pp61-69.

[17] Mueller M.A., Electrical generators for direct drive wave energy converters, *Proc. IEE Gen. Trans. Distr.*, vol. 149, no. 4, 2002.

[18] Muzaferija S., and M. Peric, "Computation of Free Surface Flows Using Interface-Tracking and Interface-Capturing Methods, in Nonlinear Water Wave Interaction," eds. O. Mahrenholtz, M. Markiewicz , pp 59-100, WIT Press, 1999.

[19] Newman, "Marine Hydrodynamics," The MIT Press, 1977

[20] Patel, M.H., Dynamics of Offshore Structures, Butterworth & Co., 1989

[21] Rhinefrank K., E.B. Agamloh, A. von Jouanne, A.K. Wallace, J. Prudell, K. Kimble, et. al., A Novel Ocean Energy Permanent Magnet Linear Generator Buoy, *Renewable Energy*, volume 31, issue 9, pages 1279-1298, July 2006.

[22] Sakar T., D. Vassalos, A RANS based technique for simulation of the flow near a rolling cylinder at the free surface, *J. of Marine Science and Techn*., Vol 5. 2000, pp 66-77.

[23] Salter S.H., D.C. Jeffery, J.R.M. Taylor, The architecture of nodding duck wave power generators, The Naval Architect, 1976

[24] Vantore M., R. Banasaik, R. Verhoeven, Modeling of hydraulic performance and wave energy extraction by a point absorber, *Applied Ocean Research*, Vol. 26, 2004, pp 61-72.

[25] Wang, J., Jewell, G.W., Howe, D., A general framework for the Analysis and Design of Tubular Linear Permanent Magnet machines, IEEE Transactions on Magnetics, Vol.35, No.3, May 1999.

[26] Wang J., D. Howe, Analysis of axially magnetized, iron-cored tubular permanent magnet machines, *IEE Proceedings of Electric Power App.*, vol. 151, #2, March 2004.

[27] Yonnet J.P., S. Hemmerlin, E. Rulliere and G.. Lemarquand "Analytical calculation of permanent magnet couplings," *IEEE Transactions on Magnetics*, vol. 29, no. 6 November 1993.



Copyright © 2007 by ASME