ANALYTICAL METHOD FOR THE PREDICTION OF RELIABILITY AND MAINTAINABILITY BASED LIFE-CYCLE LABOR COSTS

Mark Fitzpatrick
ISDS, Product Support
The Boeing Company
Wichita, KS

Robert Paasch
Department of Mechanical Engineering
Oregon State University
Corvallis, OR

1 INTRODUCTION

In today's competitive marketplace, the quality of a product is becoming increasingly more important. The informed customer not only weighs the ability of the product to meet his/her requirements, and the purchase price of the product, but also the money that must be expended to maintain the function of the product. Hence, lowering the life-cycle cost of a product will increase its value and attractiveness to the customer.

Reliability and Maintainability greatly influence the life-cycle cost of complex systems. The more reliable and the more maintainable the product is, the lower its life-cycle cost will be. Reliability is defined as the probability that an item will adequately perform its specified purpose for a specified period of time under specified environmental conditions (Leemis, 1995). Maintainability is defined as the probability that an item will be retained in or restored to a specified condition within a given period of time (Blanchard, 1995). A Portion of the research in Reliability and Maintainability (R&M) addresses the importance of accurately quantifying the life-cycle cost of a product and subsequently lowering that cost. However, most R&M research in this area has not attempted to utilize R&M analysis as a design tool. The accepted R&M analysis methods are used for the evaluation of existing products based on test data retrieved from the product. Unfortunately, if the

R&M analysis gives evidence for a design change, the implementation of that change would be very expensive due to the tardiness its implementation.

The objective of this research was to develop an analytical method to adequately determine the R&M based life-cycle cost of a product early in its design phase, with the ability to compare competing designs or design changes and show the effects the competing designs or design changes may have on the life-cycle cost of the product. Early in the design process, information needed to accurately determine R&M costs will be missing or incomplete and any analysis must be regarded as a rough estimation. As the design of the product becomes more refined, the predictive accuracy will increase. The method presented in this paper was developed to aid the designer in optimizing the operating costs of the product early in the design process instead of making design modifications after a prototype has been built and tested.

The analytical method that is presented predicts three variables for each component within a system, Mean Time Between Failure (MTBF), Mean Time Between Unscheduled Removal (MTBUR), and Mean Time Between Maintenance Actions (MTBMA). Those variables are then used to find the average Line Labor Cost (LLC) and Shop Labor Cost (SLC) for each component. All the associated labor costs for the components in the system are summed together to supply the predicted labor cost for maintaining the system.

The Bleed Air Control System (BACS) from the Boeing 737-300/400/500 was chosen as a test model for the analysis for several reasons. First, there was very detailed life-cycle data available for the 737 so a comparison of actual labor cost versus the predicted labor cost could be performed. Second, there was a complete Failure Modes and Effects Analysis (FMEA) available on the 737 BACS that could be easily converted into a fault tree analysis. Lastly, the BACS has a history of having high maintenance costs and being misdiagnosed, so there was a corporate interest in finding a solution to increase the diagnosability and lower the maintenance costs of the BACS.

2 BACKGROUND

Most Reliability and Maintainability (R&M) analytical methods concentrate on utilizing laboratory test data to provide an adequate estimate of the life-cycle cost of a product. All share a commonality in that they utilize short time period test data to determine the life-cycle failure data.

Ansell (1994) explains and demonstrates a good number of the common reliability data analysis methods.

Some R&M researchers have concentrated on specialized areas within the whole of Reliability and Maintainability. A portion of this research is attempting to predict measures that influence the life-cycle cost of a product prior to attaining test data from a prototype. One method being developed is Service Mode Analysis (Bryan, 1992). Service modes are the ways in which a system may be serviced and Service Mode Analysis is a method for describing which service modes will impact a particular design and in what manner (Gershenson, 1991). This method separates analyzing service modes into two categories, Component-based service modes and Phenomena based service modes. The superiority of phenomena based service modes analysis is presented and phenomena based service cost is expressed as a function of labor time, labor rate, necessary tools, necessary training, replacement part cost, and replacement part availability. Later research in this area (Eubanks, 1993, Marks, 1993) progresses the development of a computer software package to perform serviceability analysis. The computer program operates by defining items and their connection to other items. Each item in a system can be defined as either a component, subassembly, fastener, or process and its relationship to other items can be described as covers, attaches to, connects to, engages, or supported by. Repair operations within the program can be defined as replace, repair, overhaul, adjust/align, or tighten/connect/lubricate. By assessing all the inputs, a method for analyzing and comparing competing designs is developed. More recent research (Di Marko, 1995) introduces a computerized method of performing an initial Failure Modes and Effects Analysis (FMEA), this is combined with the previous research to increase the predictive ability of Service Mode Analysis. This research is progressing the predictability of maintainability issues, however, it does not devote the same effort to predicting reliability related issues or the diagnostic process.

Attention is also being devoted to the diagnosability of a product Research in this area by Ruff (1997) developed form-to-function mapping. Form-to-function mapping is a method of graphically representing the relationships between function, performance measures, and components in a mechanical system. Ruff shows that modifying the interaction between components and performance measures could increase the diagnosability of the system.

Clark (1996) developed a distinguishability metric for the evaluation a competing designs based on diagnosability. The distinguishability metric is a function of the total number of failure indications, the total number of components, and the number of candidate components per failure indication. Clark utilized the Bleed Air Control System (BACS) on the Boeing 747 as a test model to verify his results.

Wong (1994) attempted to link diagnosability directly with life-cycle-cost. This method utilizes the probability of a failure indication occurring multiplied by the average time to diagnose the failure indication and the hourly maintenance cost to yield a cost estimate based on diagnosability. When the cost to diagnose all the possible failure indications for a system are summed, a life-cycle cost estimate is arrived at. A similar method is utilized by Goldberg (1987) to determine component reliability of an electric power feeder.

Murphy (1997) developed a method for determining the Mean Time Between Unscheduled Removal (MTBUR) of system components. Unscheduled removal of components is separated into two categories, justified and unjustified. The justified unscheduled removals are equivalent to the Mean Time Between Failure (MTBF) of the component. An unjustified unscheduled removal is defined as the unscheduled removal of a component that has not failed. A formula is developed to determine the unjustified unscheduled removal of components based on the MTBF's of other possible failed components and the labor involved in component removal.

The largest failing of the for-mentioned diagnosability research, based on predictability, is its reliance on historical failure data. This research will utilize much that has been previously developed in diagnosability, but with the addition of a process to predict the required failure data.

3 DESCRIPTION OF THE 737-300/400/500 BLEED AIR CONTROL SYSTEM

Since the 737 BACS is used as a test model to demonstrate the analysis method, it would be appropriate to introduce the function and layout of the BACS before proceeding with a description of the analysis method. The function of the BACS is to supply the air-using systems of the aircraft, such as cabin air conditioning, anti-icing, and engine starting, with properly pressurized and temperature controlled air. This mission is accomplished by a series of valves, ducts, electrical and pneumatic controls, and a heat exchanger that take air from the jet engine compressors. Figure 1 shows a schematic drawing of the BACS.

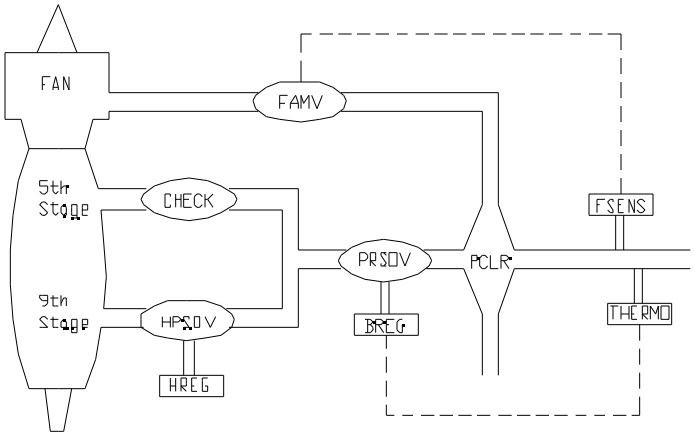

Figure 1. 737 BACS Schematic

The system is composed of nine major components which are listed in Table 1 along with their associated abbreviations

CHECK:	5th Stage Check Valve
HPSOV:	High-Stage Pressure Shut-Off Valve
HREG:	High-Stage Regulator
PRSOV:	Pressure Regulating and Shot-Off Valve
BREG:	Bleed-air Regulator
FAMV:	Fan Air Modulating Valve
PCLR:	Precooler heat exchanger
FSENS:	Precooler temperature sensor
THERMO:	450F Thermostat

Table 1. 737 BACS Component List

Under most operating conditions, the air taken from the 5th stage of the compressor is capable of supplying the proper air to the BACS through the 5th stage check valve, however, under low engine output conditions the HPSOV is required to take air from the 9th stage compressor to maintain proper air pressure. When the HPSOV is in operation, the 5th stage check valve prevents any back flow into the 5th stage compressor. The HREG monitors the air pressure to control the operation of the HPSOV. The PRSOV modulates to control the air pressure that is being supplied to the air-using systems and the BREG monitors the air pressure to control the PRSOV. The THERMO also plays a part in controlling the PRSOV, when the supplied air temperature goes above 450(F, the THERMO limits the amount of air that the PRSOV will supply until the air temperature drops below 450(F again. The FAMV regulates the amount of air that is taken engine fan to be run through the PCLR. The FSENS monitors the temperature after the PCLR exit to control the FAMV. The PCLR is a heat

exchanger that uses fan air to cool the air taken from the compressors before it is supplied to the air-using systems.

The BACS currently has five indications to determine wither the system is operating properly or not, these indications are above and below normal air pressure in the BACS read from an analog pressure gauge, a bleed trip off light that illuminates when the BACS has been shut down to prevent over-temp or over-pressure, and lastly low cabin pressure and temperature readings from analog gauges. For modeling purposes, the for-mentioned indications will be referred to by indication number as listed in Table 2

Indication 1:	BACS Pressure High
Indication 2:	BACS Pressure Low
Indication 3:	Bleed Trip Off
Indication 4:	Cabin Pressure Low
Indication 5:	Cabin Temperature Low

Table 2. 737 BACS Failure

4 ANALYSIS METHOD

The analysis method that was developed contains five distinct operations (System Modeling, Predict MTBF's, Predict MTBMA's, Predict MTBUR, and Figure Cost) with a total of 13 steps. The end result of this process will yield an estimation of the labor costs that are to expected in maintaining the product.

Some assumptions must be made up front to simplify the analysis method. First, all components are assumed to be replaceable on the maintenance line and that maintenance personnel have all the necessary tools and training to perform the removal. Second, only one component failure is considered to have occurred at any point in time, no multiple component failures are considered. Third, no passive failures or failures without indication are considered, and fourth, no indicator failures are considered.

The system modeling phase will convert the FMEA of the system into usable information for the analysis. This phase will require a complete FMEA for the system to be analyzed.

The phase to predict the MTBF's of the system components is a two step process. The first step in this phase requires the engineer to rank all the systems components in the areas of complexity, use, and working environment. The summation of the components ranks will indicate which components are more prone to have higher failure rates. The result of this step is an ordered list of the systems

components from higher failure rates to lower failure rates. The next step in this phase presents a common failure pattern for mechanical systems. This pattern is utilized with the results of the previous step to determine component Failure Rates (FR), which are inverted to give MTBF's.

The phase to predict MTBMA is a four step process, each of the four steps must be performed for every unique failure indication and indication combination. The four steps in this process determine 1) the probability of a failure indication occurring, 2) the order in which components should be analyzed, 3) the probability of a given component causing the failure indication, and finally 4) the average Maintenance Rates for the components that can cause the failure indication. The Maintenance Rates (MR) for each component from the different failure indications are summed together and inverted to get the MTBMA for each component. This phase will require the predicted Failure Rates from the previous phase, the probability that the components failed in a particular mode, and the Average Time to Perform a Maintenance Action (ATFMA) for each component is assumed to known or arrived at by some other method.

The phase to predict the MTBUR's is a three step process. The first step in this phase figures the justified MTBUR for each component, which is equivalent to its MTBF. The second step in this phase finds the unjustified MTBUR for each component. The unjustified MTBUR is found for each component in each different failure mode based on the MTBF's of other components and the Line and Shop Labor Hours per Removal (LLHPR and SLHPR). All the unjustified MTBUR's for each component are combined to get a total unjustified MTBUR. The third step in this phase uses the justified and unjustified components of the MTBUR to give a total MTBUR for each component in the system.

The final phase of this process is to compute the labor cost prediction based on the MTBMA, MTBUR, ATFMA, LLHPR, and SLHPR of each component. The line and shop labor costs are computed for each component and then summed together to receive a total labor cost for maintaining the system.

4.1 Method for System Modeling

The first step that must be performed is to model the mechanical system so that it can analyzed. To perform this step, a good knowledge of the system layout and function is required along with a

complete FMEA. The results of this step were previously determined by Murphy and the initial method was developed by Ruff.

The FMEA for the BACS contains numerous amounts of information that is not utilized by this analysis method. What must be derived from the FMEA is the types of failures that each component can have and what failure indications are present when that type of failure has occurred. For example, when the HPSOV has failed such that it is stuck in the near open position, indication 1, BACS pressure high, is evident. If the HPSOV fails in the full open position, the system will become over pressurized and shut down, so indication 3 will also be associated with this failure. If the HPSOV fails in a closed or near closed position, indication 2, BACS pressure low, will be seen. The probabilities that the component failed in a certain mode were obtained from the FMEA. For the HPSOV, the probability that the component failed in the closed or near closed position is 70%, failed in the near open position is 25%, and failed in the full open position is 5%.

From the FMEA, a fault tree can be constructed to graphically represent the possible failures of the system and show which failure indications are affected. A table is then formed that lists all the possible failure indications that a component can cause and a probability that the component will fail in the mode that causes the indication. Table 3 shows the failure probabilities associated with the BACS, taken from a historical based FMEA.

COMPONENT	INDICATION #	PROBABILITY
HPSOV	1	25%
	1-3	05%
	2	70%
PRSOV	1	30%
	2	70%
PCLR	2	65%
	2-4	15%
	2-4-5	10%
	2-5	05%
	4	05%
FAMV	2	25%
	2-3	05%
	5	70%
CHECK	2	100%
HREG	1	45%
	1-3	10%
	2	35%
FSENS	2	25%
	2-3	05%
	5	70%
BREG	1	55%

	2	35%
THERMO	2	10%
	3	90%

Table 3. 737 BACS Failure Indications

4.2 Predicting Mean Time Between Failures

The objective of this analysis method is to supply estimated MTBF data for the system components without having historical or test data. Traditionally, component failure rates are determined either from the underlying physics or from historical data. In the conceptual design phase of a product, historical or test data is typically not available and the design may not be of enough detail to perform an analytical failure analysis. To produce a rough estimate of failure rates for components in a system, we propose extrapolation from the known failure rate data for one component. By utilizing engineering judgment and common failure patterns, estimated MTBF data can be generated very early in the design of a product.

The historical MTBF data for the BACS will be compared with the predicted MTBF data that is developed at the end of this phase.

Step 1

This step yields what is called a failure order, the purpose is to determine which components are more prone to failure. For the sake of maintaining a general analysis tool, it is assumed that the specific reasons for component failure can be summarized by the following three Macroscopic reasons for component failure (Complexity, Use, and Environment). The more complex a component is, the more likely that it will fail before a less complex component. The more that a component is used, the more the likelihood of its failure. The harsher the environment that a component is operated in, the higher the probability that it will fail. Other factors may be more appropriate, as judged by the engineer, for other systems. A underlying assumption of this method is that all the system components are equally well designed.

By ranking the components in a system, in the engineering judgment of the engineer, from best to worst (1 = best, 2 = next best, …, n = worst) in the areas of complexity, use, and operating environment, and summing the three numbers together, a failure order for the components within a

system is established. The components are ranked from highest numbers to lowest numbers with the higher numbers indicating higher failure rates. Table 4 shows the analysis performed on the BACS.

COMPONENT	COM PLEX	USE	ENVIR ON	TOTAL
BREG	9	9	7	25
HREG	8	2	9	19
PRSOV	7	8	6	21
HPSOV	6	1	8	15
FAMV	5	7	1	13
PCLR	2	5	4	11
THERMO	3	4	2	9
FSENS	4	6	3	13
CHECK	1	3	5	9

Table 4. 737 BACS Failure Order Analysis

Table 5 compares the predicted failure order with the actual.

	PREDICTED	ACTUAL
1.	BREG	BREG
2.	PRSOV	HREG
3.	HREG	PRSOV
4.	HPSOV	FAMV
5.	FAMV	HPSOV
6.	FSENS	FSENS
7.	PCLR	THERMO
8.	THERMO	PCLR
9.	CHECK	CHECK

Table 5. Predicted vs. Actual Failure Order for the 737 BACS

As can be seen from the chart, this method develops the trend of the components failure rates. Although this method does not accurately place every component, it does not miss place any component by more than one place away from where it should be.

The method for predicting the failure order of system components has not been fully developed. It has not yet been determined if complexity, use, and environment are equally responsible for causing component failure. The method worked well on the BACS, however, further research in the development of a failure order is indicated. Increased accuracy in the failure order will greatly increase the accuracy of the method.

Step 2

This step will assign a failure rate to all of the components in the system based on the failure order and an estimation of a failure rate from one of the components. Even on a newly designed system, there is usually at least one component that has a known failure rate from its use in a older system or by extrapolating data from a related component operating in a similar fashion. However, the reliability of the known failure data is a important to the success of this method and should be carefully selected.

Within the R&M industry, there is a general rule of thumb called the 80/20 rule. This rule of thumb states that 80% of your maintenance expenses for a system will be caused by only 20% of the components. For example, in a system with ten different components it can estimated that 80% of the maintenance costs will be caused by the two most failed components. Again, this is a rule of thumb and is by no means accurate nor does it give any clue to the actual maintenance cost. However, the fact that a general rule like the 80/20 rule exists does give evidence that a predictable pattern of failure rates exists relative to the components that compose a mechanical systems. The goal of this section is to utilize historical data to prove the existence of a predictable failure pattern (failure pattern being defined as the way the failure rates of the different system components relate over the system life-cycle) for mechanical systems and then utilize that pattern to predict the MTBF's for the BACS components.

For the Boeing 737, six wholly separate mechanical systems were analyzed and failure rate data plotted from the historical failure data. Two representative plots are shown in Figures 2 and 3, plots from the other four systems were similar. Each point in the figure represents a component in the system and the points were evenly spaced between 0 and 1 along the x-axis, most failed at 0 to least failed at 1. The normalized failure rate, which is the y-axis, for each component was arrived at by dividing the components actual failure rate by the failure rate of the most failed component in the system. The line that connects the points in each graph is presented to aid in visualization of the pattern.

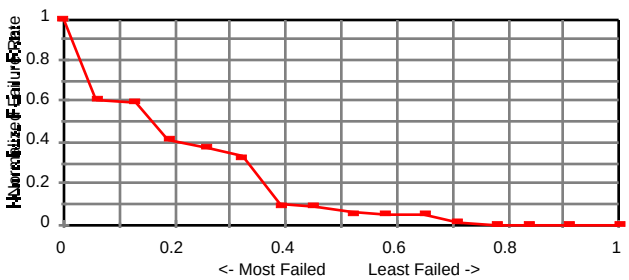

Figure 2. Normalized Failure Pattern - 737 Flap System

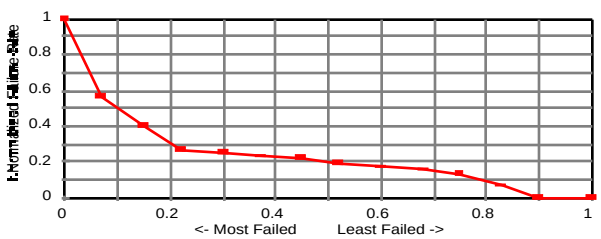

Figure 3. Normalized Failure Pattern - 737 Fuel Pump System

As can be seen from the two figures, by portraying the historical failure data of the different mechanical systems in this manner, a similar negative exponential pattern can be seen. From this generalized failure pattern, a formula can be developed to predict the failure rates of all the components in a system based on this pattern. An estimated failure rate of one component in the system is required to provide an actual failure rate prediction instead of a normalized failure rate prediction. The failure order that was developed in the previous step is needed to properly place the components on the graph. The formula that was developed for failure rate prediction is based on exponential functions to produce a curve that simulates the negative exponential pattern shown in the above graphs, it was created by displaying all the available failure data on one graph and developing a formula to best fit the average of that data.

$$FR_i = \frac{FR_{known} \dfrac{e^{-x_i^{0375}} - e^{-1}}{e^{0} - e^{-1}}}{\dfrac{e^{-x_{known}^{0375}} - e^{-1}}{e^{0} - e^{-1}}} \qquad (1)$$

where x_i is the x-axis position of the component in question, and x_{known} is the x-axis position of component for which the Failure Rate is known. The 0.375 factor is a result of curve fitting. The x-

axis position of all the components in the system are generated by evenly spacing the components between 0 and one, most failed at zero to least failed at one, following the failure order that was previously determined. The known component failure rate should be as far to the left on the curve as possible for accuracy reasons.

Figure 4 shows the prediction curve from the formula developed above and the actual and predicted failure rates for the BACS. The failure rate for the BREG was used as the known failure rate.

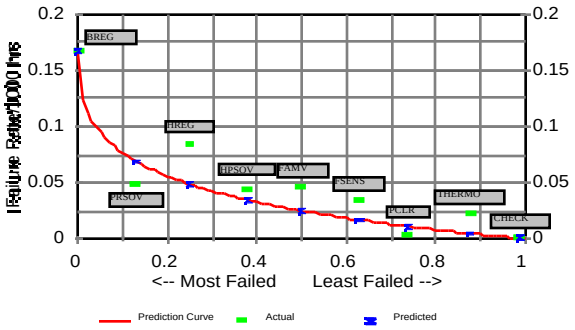

Figure 4. MTBF Prediction

By inverting the predicted failure rates from the Figure 4, a predicted MTBF for each component is arrived at. Table 6 lists the predicted MTBF's versus the actual MTBF's for the BACS components.

COMPONENT	PREDICTED MTBF	ACTUAL MTBF
BREG	5980	5980
PRSOV	14500	20220
HREG	20600	11840
HPSOV	28900	22348
FAMV	39900	21489
FSENS	59600	28232
PCLR	91200	235348
THERMO	214000	45762
CHECK	2720000	471934

Table 6. Predicted vs. Actual MTBF's for the 737 BACS

There is expected error associated with this prediction method. The actual data was generated from three years of maintenance logs across the entire 737 fleet, while the predicted data can be generated in the conceptual design phase of product development. The accuracy of the predicted

MTBF data can be improved by improving the failure order that was previously developed. Current research, as discussed in the summary, is attempting to refine this prediction technique.

4.3 Predicting Mean Time Between Maintenance Actions

For each unique failure indication, there is a diagnostic process that must be performed by the maintenance personnel. The developed method attempts to simulate that diagnostic process and yields a maintenance rate for all the possible components for that failure indication. The method that is presented must be performed for each different failure indication to find the overall maintenance rates, and conversely the MTBMA's, for each component.

The method used to predict MTBMA is a modified version of that developed by Wong (1994). The main modifications to this method is the inclusion of the probabilities that a component failed in a particular mode to cause a particular failure indication ($PF_i|ind$). This data was developed in the system modeling phase and is listed in table 3. Also, the end result of the method utilized here is a prediction of MTBMA data, while Wong attempted to solve directly for cost.

The average time to perform a maintenance action (ATFMA) for each component is needed to perform this phase of the analysis. The ATFMA data is assumed to be known or arrived at by some other method. For the BACS, the ATFMA's were developed from historical data by The Boeing Company and are listed below.

COMPONENT	ATFMA (hrs.)
HPSOV	0.40
PRSOV	0.89
PCLR	43.00
FAMV	1.33
CHECK	1.00
HREG	2.00
FSENS	0.05
BREG	3.00
THERMO	0.05

Table 7. ATFMA of the 737 BACS components

Other data that is needed is the predicted failure rate data from the previous phase.

The method presented here contains four steps. The first step finds the probability that a particular failure indication will occur. The next step develops an optimum checking order to diagnose system components and the checking order is utilized along with failure data to determine the probabilities that a particular component will be the cause of a failure indication. The final step is to

determine the Maintenance Rate for each component per indication, which is a function of the probability of the indication occurring multiplied by the probabilities that the previous checked components in the diagnostic process have not failed.

Step 1

The probability of each failure indication occurring must be computed. The probability of a failure indication occurring is a function of the failure rates of all the components that can cause that given failure indication and the associated probabilities that the components will fail in a mode that will cause the given failure indication. The formula below is used to find the probability of an indication (P_{ind}).

$$P_{ind} = 1 - \prod_{i=1}^{n} \left(1 - \left(FR_i\right)\left(PF_i | ind\right)\right) \qquad (2)$$

Where FR_i is the failure rate of the component, which is arrived at by inverting the predicted MTBF that was developed in the previous phase, and $PF_i | ind$ is the probability that the component failed in the mode to produce this given failure indication.

For example, four components (BREG, PRSOV, HREG, HPSOV) can fail in a mode that causes indication 1, BACS pressure high. The probability of indication 1 occurring in 1000 flight hours is presented.

$$P_{ind1} = 1 - \prod_{i=1}^{4} \left(1 - \left(FR_i\right)\left(PF_i | ind1\right)\right)$$

Where i=1 is BREG, i=2 is PRSOV, i=3 is HREG, and i=4 is HPSOV

$$P_{ind1} = 1 - \left(1 - (0.1673)(0.55)\right)\left(1 - (0.0688)(0.30)\right)\left(1 - (0.0487)(0.45)\right)\left(1 - (0.0346)(0.25)\right)$$

$$P_{ind1} = 0.13773$$

Step 2

The checking order index must be established to simulate the trouble shooting process. The variables of failure rate and maintenance time were selected because they are the biggest factors that influence a mechanics choice to check one component before another. This step will determine the

order in which components should be checked based on probabilities of failure and maintenance times. The formula for the checking order index is presented.

$$CO_{i|ind} = \frac{(FR_i)(PF_i|ind)}{ATFMA} \qquad (3)$$

Where ATFMA is the Average Time For Maintenance Action. A checking order index must be determined for each candidate component for a given failure indication. The components are then assumed to be checked in order from highest checking order index to lowest checking order index so the analysis method can have a repeatable result. Some situations may determine that failure rate or maintenance times are more important than the other variable. In this situation, the engineer should weight the important variable to his/her informed discretion. No weighting was used for the analysis on the BACS.

$$CO_{BREG} = \frac{(FR_{BREG})(PF_{BREG}|ind1)}{ATFMA_{BREG}} = \frac{(0.1673)(0.55)}{3.00} = 0.0306$$

$$CO_{PRSOV} = \frac{(FR_{PRSOV})(PF_{PRSOV}|ind1)}{ATFMA_{PRSOV}} = \frac{(0.0688)(0.30)}{0.89} = 0.0232$$

$$CO_{HREG} = \frac{(FR_{HREG})(PF_{HREG}|ind1)}{ATFMA_{HREG}} = \frac{(0.0487)(0.45)}{2.00} = 0.0109$$

$$CO_{HPSOV} = \frac{(FR_{HPSOV})(PF_{HPSOV}|ind1)}{ATFMA_{HPSOV}} = \frac{(0.0346)(0.25)}{0.40} = 0.0216$$

So the order in which the components should be checked for indication 1 is, BREG: PRSOV: HPSOV: HREG.

Step 3

The probability that a given component is the cause of the failure indication must now be determined by the formula listed below.

$$P_{comp|ind} = \frac{(FR_{comp})(PF_{comp}|ind)}{\sum_{unchecked}(FR_i)(PF_i|ind)} \qquad (4)$$

Aside from the inclusion of the probability of a component failing in a particular mode, this formula was further modified from that of Wong (1994) to consider unchecked components only. When a component is checked, it is determined if that component is the cause of the failure or not. If

the component is not the cause of the failure, then the next component in the checking order must be checked. Since the previously checked component is known to be in working order, it is no longer a function in the equation.

In the example, once the BREG is checked and if it is found to be in working order, the probability that the PRSOV is the failed component is not dependent on the BREG since it is now a known quantity. Below are the probabilities that each of the candidate components for failure indication 1 have in being the failed component based on the unchecked components.

$$P_{BREG|1} = (01673)(0.55) \Big/ \begin{matrix}(01673)(0.55) + (0.0688)(0.30) + \\ (0.0346)(0.25) + (0.0487)(0.45)\end{matrix} = 0.64$$

$$P_{PRSOV|1} = \frac{(0.0688)(0.30)}{(0.0688)(0.30) + (0.0346)(0.25) + (0.0487)(0.45)} = 0.40$$

$$P_{HPSOV|1} = \frac{(0.0346)(0.25)}{(0.0346)(0.25) + (0.0487)(0.45)} = 0.28$$

Step 4

This step develops the Maintenance Rates of the components within the system. Determining the maintenance rate for a component is a function of the probability that the failure indication occurred and the probabilities that all the previous components in the checking order were not failed.

$$MR_{comp|ind} = (P_{ind}) \underset{checked}{} (1 - P_{comp|ind}) \qquad (5)$$

The maintenance rates per 1000 flight hours for the components that are relevant to failure indication 1 are listed below.

$$MR_{BREG|1} = 01377$$
$$MR_{PRSOV|1} = (01377)(1 - 0.64) = 0.0496$$
$$MR_{HPSOV|1} = (01377)(1 - 0.64)(1 - 0.40) = 0.0297$$
$$MR_{HREG|1} = (01377)(1 - 0.64)(1 - 0.40)(1 - 0.28) = 0.0214$$

These four steps are repeated for every different failure indication. The maintenance rates for each component are then summed together and inverted to produce the total MTBMA for each component in the system. The results for the BACS are listed in Table 8. N/A indicates that the information was not available.

COMPONENT	PREDICTED MTBMA	ACTUAL MTBMA
BREG	4507	N/A
PRSOV	5585	10515
HREG	18082	4000
HPSOV	5300	3154
FAMV	31496	9000
FSENS	5337	31544
PCLR	94905	27800
THERMO	29720	N/A
CHECK	2724796	N/A

Table 8. Actual vs. Predicted MTBMA for the 737 BACS

The results that were developed by this method seem fairly erred when compared to the actual data. MTBMA data is not nearly as important to maintenance cost issues as MTBF or MTBUR data, however, MTBMA data is necessary to fully use the Line Labor Cost Formula that is utilized by this method. In the absence of another, more accurate, method to determine MTBMA, the presented method was utilized so a fully predicted cost analysis could be performed.

4.4 Predicting Mean Time Between Unscheduled Removal

This analysis method was developed by Murphy (1997). The only deviation from Murphy's method is the utilization of Predicted MTBF's instead of Historical MTBF's for the components in the system.

Step 1

Murphy (1997) separates unscheduled component removals into two categories, justified and unjustified. The justified unscheduled removals are equivalent to the failure rates of each component, so the is equal to the MTBF for each component.

$$MTBUR_j|comp = MTBF|comp \tag{6}$$

Step 2

The unjustified unscheduled removal of a component is due to misdiagnosis of the system, it represents the removal of a component that was thought to be failed but in actuality was not. Murphy presents a formula that specifies unjustified MTBUR as a function of the MTBF's of the other candidate components for a failure indication and the probability of detection.

$$MTBUR_{uj_{comp}} | ind = \frac{MTBF_{comps}^{other}}{PD_i} \tag{7}$$

Where,

$$PD_i = \frac{\frac{(FR_i)(PF_i | ind)}{(LLHPR + SLHPR)}}{\sum_{i=1}^{n} \frac{(FR_i)(PF_i | ind)}{(LLHPR + SLHPR)}} \tag{8}$$

Step 3

When both justified and unjustified MTBUR's are known, the actual MTBUR can be calculated as shown below.

$$MTBUR_{actual} = \frac{1}{\frac{1}{MTBUR_j} + \frac{1}{MTBUR_{uj}}} \tag{9}$$

The MTBUR results for the BACS are listed in Table 9.

COMPONENT	PREDICTED MTBUR	ACTUAL MTBUR
BREG	4488	4654
PRSOV	8119	15664
HREG	8900	8455
HPSOV	15817	9996
FAMV	29557	13520
FSENS	26998	21256
PCLR	81935	90987
THERMO	172391	19957
CHECK	1004908	471934

Table 9. Predicted vs. Actual MTBUR for the 737 BACS

The MTBUR results that were developed from the predicted MTBF data are equivalent to the MTBUR data that was developed by Murphy using historical MTBF data. The MTBUR data is the main influence in figuring maintenance costs so it is a promising occurrence to get similar results from predicted MTBF data as is received from actual MTBF data.

4.5 Labor Cost Evaluation

Once the MTBF's, MTBUR's, and MTBMA's are known for each component in a system, a cost analysis can be performed. The formulas for Line Maintenance Cost and Shop Maintenance Cost where developed by the Boeing Company, however, Boeing utilized the formulas to figure the cost for an airplane fleet per year. The formulas utilized here were simplified to solve for cost per 1000 flight hours of a single plane.

Step 1

The formula for computing line labor maintenance cost is as follows.

$$\text{Line Labor Cost} = (\text{hourly line labor cost})\left(\frac{3}{4}\frac{LLHPR}{MTBUR}\right) + \left(\frac{3}{4}\frac{ATFMA}{MTBMA}\right) \tag{10}$$

Step 2

The formula for computing shop labor maintenance cost is as follows.

$$\text{Shop Labor Cost} = (\text{hourly shop labor cost})\left(\frac{3}{4}\frac{SLHPR}{MTBUR}\right) \tag{11}$$

Step 3

The total labor cost is found by summing the Shop Labor Cost and Line Labor Cost together for all the components in the system. Historically, the BACS requires a labor cost of $517.00 per 1000 flight hours and the final cost developed from the prediction method presented is $416.00 per 1000 flight hours, an error of 20%. Although the error of the result is fairly large, the resulting cost analysis is still of value. It must be remembered that the final labor cost was fully predicted by the analysis method. Detailed historical data or laboratory test data is not required. As will be demonstrated in the succeeding section, the analysis method is sensitive to prospective changes in the system as well. This ability makes the method useful as a design tool to compare the up front cost of a design change or a competing design idea versus the life time savings that the change will produce.

5 ANALYSIS OF PROPOSED CHANGES TO BLEED AIR CONTROL SYSTEM

For an analysis method to be useful as a design tool, it must be coarse enough to yield reasonable results without precise data, yet sensitive enough to pick-up small changes and produce the effect that the change will induce. This section demonstrates the ability of the method to predict the effect of design changes on maintainability costs. Four prospective changes to the BACS are examined in this section. Each design change is considered independently of the other design changes

5.1 Design Change #1, PRSOV Failed Closed Indication

This design change adds a mechanical switch to the PRSOV that is depressed when the valve is in the closed or near closed position. This switch gives another failure indication to the pilots if the PRSOV is stuck in the closed position. This change was modeled by adding a failure indication 6 to represent the PRSOV stuck in the closed position. This design change effectively removes the PRSOV from the trouble-shooting process for failure indication 2 since the switch (indication 6) will inform the mechanic if the PRSOV has failed in this mode or not.

By removing the PRSOV from indication 2, the probability of that indication occurring dropped from .1562 to .1135 per 1000 flight hours and the failure probabilities of the components prior to the PRSOV in the checking were increased slightly. This had the effect of raising the MTBMA's for all the components in the BACS and greatly increasing the MTBMA for the PRSOV from 5585 hours to 10230 hours. A similar change in MTBUR is produced by the addition of the PRSOV switch. There is a slight increase in MTBUR for all components and the MTBUR for the PRSOV changes from 8199 hours to 11486 hours. The result was a predicted 6% labor cost savings.

5.2 Design Change #2, Monitor Pressure Data to Determine PRSOV Failure

This design changes involves the addition of a computer method to monitor the bleed air pressure gauge to determine PRSOV failure or not. This change was modeled as supplying failure indication 7, PRSOV failed.

The changes to the system analysis were very similar to Design Change #1. The MTBUR's and MTBMA's were reduced further and the MTBUR and MTBMA for the PRSOV were both changed to 14532 hours, the same as the MTBF. Since there is now an indication that directly determines

PRSOV failure, there is no need to even check the component unless it is known to be failed. A 10% labor cost savings was produced by this design change.

5.3 Design Change #3, External Marker on PRSOV to Indicate Valve Position

This design change placed an indicator on the outside of the PRSOV that showed valve position. Although this change does not give another failure indication to the system, it does aid in the diagnosis of the system. This change would allow diagnosis of the PRSOV on physical inspection alone and prevent the need to remove the valve for inspection. This was modeled by reducing the ATFMA for the PRSOV to 0.05 hours.

The effect that this change had on the calculations was changing the checking order for the failure indications that involved the PRSOV. The effect that this had was lowering the MTBMA of the PRSOV from 5585 hours to 3402 hours, since it is now first in the checking orders that it is involved in. The MTBMA for the other components increased or decreased slightly. This is because the change in the checking order changed the probabilities of the checked components being the failed components. The predicted labor cost savings from this design change was 1.8%.

5.4 Design Change #4, Monitor Current to BREG to Determine Failure

This design change calls for the introduction of a computer logic card to monitor the current being supplied to the BREG. By monitoring the current, it can be determined if the BREG has failed or not. This was modeled in the formula by adding indication 8, BREG failure, to the possible failure indications.

As with the PRSOV in design change #2, this design change effectively removes the BREG from being a candidate in indication 1 and indication 2. Since the BREG has the highest failure rate in the system, the isolation of this component drastically lowers the probability of indication 1 and 2 occurring, They change from 0.1377 and 0.1562 to 0.0504 and .1038 respectively. Also, the probabilities of the checked component being the failed component noticeably increase with the BREG removed from the equation. The MTBUR's of all the components are raised as well due to the reduces ambiguity of the system. These effects combine to produce a 18.5% labor cost savings with this design change.

6 CONCLUSIONS AND RECOMMENDATIONS

The end result of this research is a tool to aid in the design of a product based on life-cycle cost. The developed method calculates the life-cycle labor cost that is to be expected while maintaining the product. The developed method is also capable of comparing competing designs or design changes based on cost. Although the inclusion of the capital costs of the product was not part of this research, it is relatively easy to quantify and should be used to fully analyze life-cycle cost savings. This method provides the designer the ability to make more informed decisions earlier in the design process, so design changes can be made in the most inexpensive manner possible.

The assumption of knowing the SLHPR, LLHPR, ATFMA, and having a detailed FMEA in the early stages of the design is fairly major. However, the Service Mode Analysis (Eubanks, 1993) that is being developed addresses these variables and issues in a predictive manner. With the inclusion of a method that predicts the variables that were assumed known in this research, the predictive ability of this research increases greatly.

Further research in this area should concentrate in many different areas. The method that was developed here is fairly long and tedious when performed by hand. Developing this method into a computer program would increase its ease of use and greatly decrease the analysis time required. The inclusion of a Service Modes Analysis would also be of benefit in the future. The inclusion of Service Modes Analysis would effectively predict everything impacting the life-cycle cost of a product with the bare minimum of assumptions. Lastly, more research should be placed into the assigning of the failure ranking (Section 4.2). Increased accuracy in this area would greatly increase the accuracy of the entire method.

ACKNOWLEDGMENTS

This material is based on work supported by the National Science Foundation under grant number DMII-9309193. In addition, the authors would like to thank the Boeing Company for their assistance on this project.

REFERENCES

Blanchard, Benjamin S., Verma, Dinesh, Peterson, Elmer L., 1995, Maintainability: A Key To Effective Serviceability and Maintenance Management, John Wiley and Sons, New York.

Bryan, Christopher, Eubanks, Charles, Ishii, Kosuke, 1992, "Design For Serviceability Expert System", ", Proc. of the 13th International Computers in Engineering Conference, pp91-98.

Clark, G. E. , Paasch, R. K., 1996, "Diagnostic Modeling and Diagnosability Evaluation of Mechanical Systems", Journal of Mechanical Design, 118 (3): pp. 425-431.

Di Marko, Patrick, Eubanks, Charles F., Ishii, Kos, 1995, "Service Modes and Effects Analysis: Integration of Failure Analysis and Serviceability Design", Proc. of the 15th International Computers in Engineering Conference, Boston, MA, pp. 833-840.

Eubanks, Charles F., Ishii, Kosuke, 1993, "AI Methods for Life-Cycle Serviceability Design of Mechanical Systems", Artificial Intelligence in Engineering, 8(2): pp127-140.

Gershenson, John, Ishii, Kosuke, 1991, "Life-Cycle Serviceability Design", Proc. of the 3rd International Conference on Design Theory and Methodology, pp127-34.

Goldberg, Saul, Horton, William F., Rose, Virgil G., 1987, "Analysis of Feeder Service Reliability using Component Failure Rates", IEEE Transactions on Power Delivery, 2, pp1292-6.

Leemis, Lawrence A., 1995, Reliability: Probabilistic Models and Statistical Methods, Prentice-Hall, New Jersey.

Marks, Matthew D., Eubanks, Charles F., Ishii, Kos, 1993, "Life-Cycle Clumping of Product Designs for Ownership and Retirement", Proc. of the 5th International Conference on Design Theory and Methodology, Albuquerque, NM, pp83-90.

Murphy, M. D., Paasch, R. K., 1997, "Reliability Centered Prediction Technique for Diagnostic Modeling and Improvement", Research in Engineering Design (1997) 9: 35-45.

Ruff, D. N., Paasch, R. K., 1997, "Evaluation of Failure Diagnosis in Conceptual Design of Mechanical Systems", Journal of Mechanical Design, Vol. 119, No. 1, pp. 57-64

Wong, Bryan, 1994, "Diagnosability Analysis for Wong, Wong, Bryan, 1994, ”Mechanical Systems and Human Factors in Diagnosability", M.S. Thesis, Department of Mechanical Engineering, Oregon State University, Corvallis, Oregon