BJT amplifier DC Operating Point

Consider the circuit below with the assumption that the transistor is in the active forward region and β = 100. Let's solve for the voltage Vout.

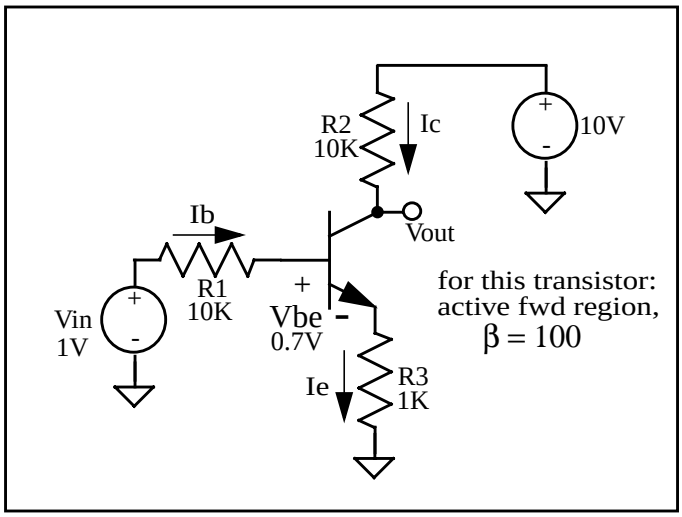

To analyze this circuit, first write the KVL loop equation around the base-emitter circuit.

-1 + 10000Ib + 0.7 + 1000Ie = 0
however, we know that Ic = βIb, thus Ie = (Ib + βIb)
= (β + 1)Ib

now, rewriting the KVL loop equation, we get:
-1 + 10000Ib + 0.7 + 1000(β + 1) Ib = 0
-1 + 10000Ib + 0.7 + 101000Ib = 0
111000Ib = 0.3
Ib = 2.7μA

Now, knowing Ib, we can calculate Ic and thus the voltage drop across the collector resistor.

Ic = 100(2.7μA) = 270μA;
thus the voltage drop across the collector resistor is:
10000(270μA) = 2.7V
and therefore, Vout is 10 - 2.7 = 7.3V.

As a check to our assumption that the transistor is not in saturation, we can see that:

Vce = 10 - 10000Ic - 1000Ie
where; Ie = 101*2.7uA = .273mA, and
Ic = 100 * 2.7uA = .27mA, therefore
Vce = 10 - 10000(.00027) - 1000(.000273)
= 10 - 2.7 - .273
= 7.07V (not is saturation)