BJT Analysis - In Class Problem

Determine: R_e such that $V_{out} = 5V$
Power Dissipation of the transistor neglecting I_B

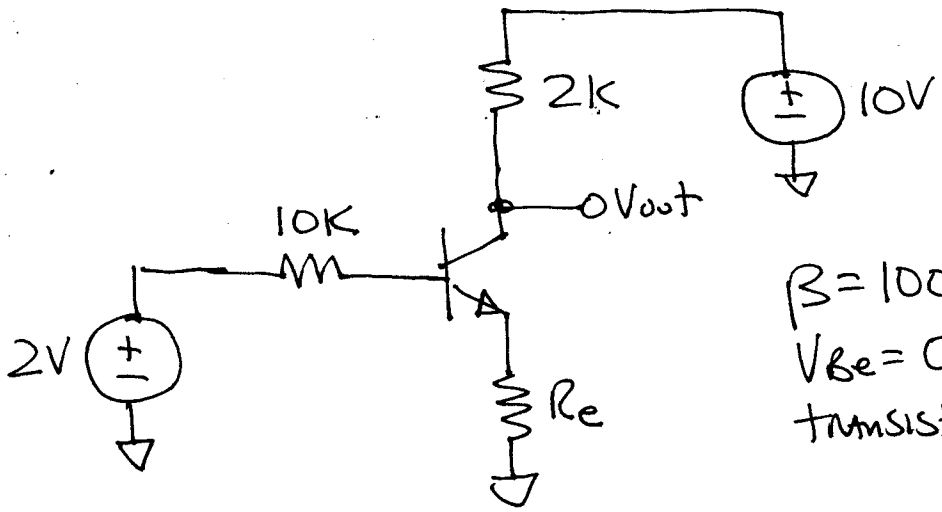

$\beta = 100$
$V_{BE} = 0.7$
transistor in active linear region

when is V_{out} e 5V? When I_C across 2K resistor drops 5V. Write KVL loop in output.

$$\text{(KVL)} \quad -10 + 2000 I_C + V_{out} = 0$$
$$-10 + 2000 I_C + 5 = 0$$
$$2000 I_C = 5 \quad \therefore I_C = \underline{2.5 mA}$$

Since we are in active linear region $I_B = I_C/\beta$ thus,
$$I_B = \underline{25 \mu A}$$

Now determine R_e by KVL loop in base emitter loop.

$$\text{(KVL)} \quad -2 + 10000 I_B + 0.7 + (\beta+1) I_B R_e = 0$$
$$-2 + 10000(25 \times 10^{-6}) + 0.7 + 2.525 \times 10^{-3} R_e = 0$$

Remember $I_E = (\beta+1) I_B$ in active linear region.

$$R_e = \frac{1.05}{.002525} = \underline{415.8}$$

nearest standard value is $\underline{430\Omega}$

Using 430 Ω as Re....

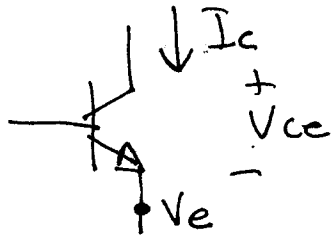

Power dissipation of transistor would be ($I_c * V_{ce}$). We need to find Ve to find Vce

Neglecting I_B, $I_e = I_c$

thus $V_e = I_c * 430 = 1.075V$

and

$V_{ce} = V_c - V_e = 5 - 1.075 = 3.925$

thus

$P_{D(transistor)} = 3.925 * 2.5 \times 10^{-3} = \underline{\underline{9.8\,mW}}$

cool as a cucumber!