BJT Analysis - In Class Problem

Determine: R_e such that $V_{out} = 5V$
Power Dissipation of the transistor neglecting I_B

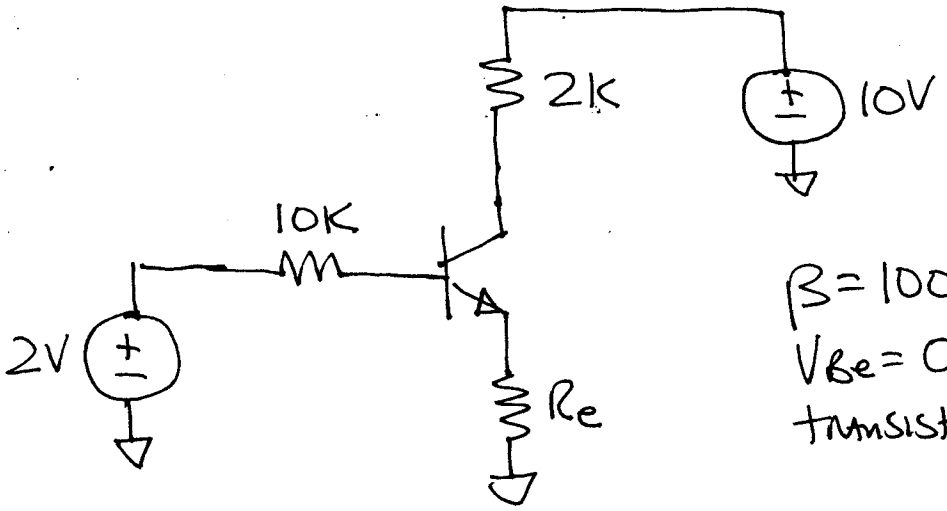

$\beta = 100$
$V_{Be} = 0.7$
transistor in Active linear Region