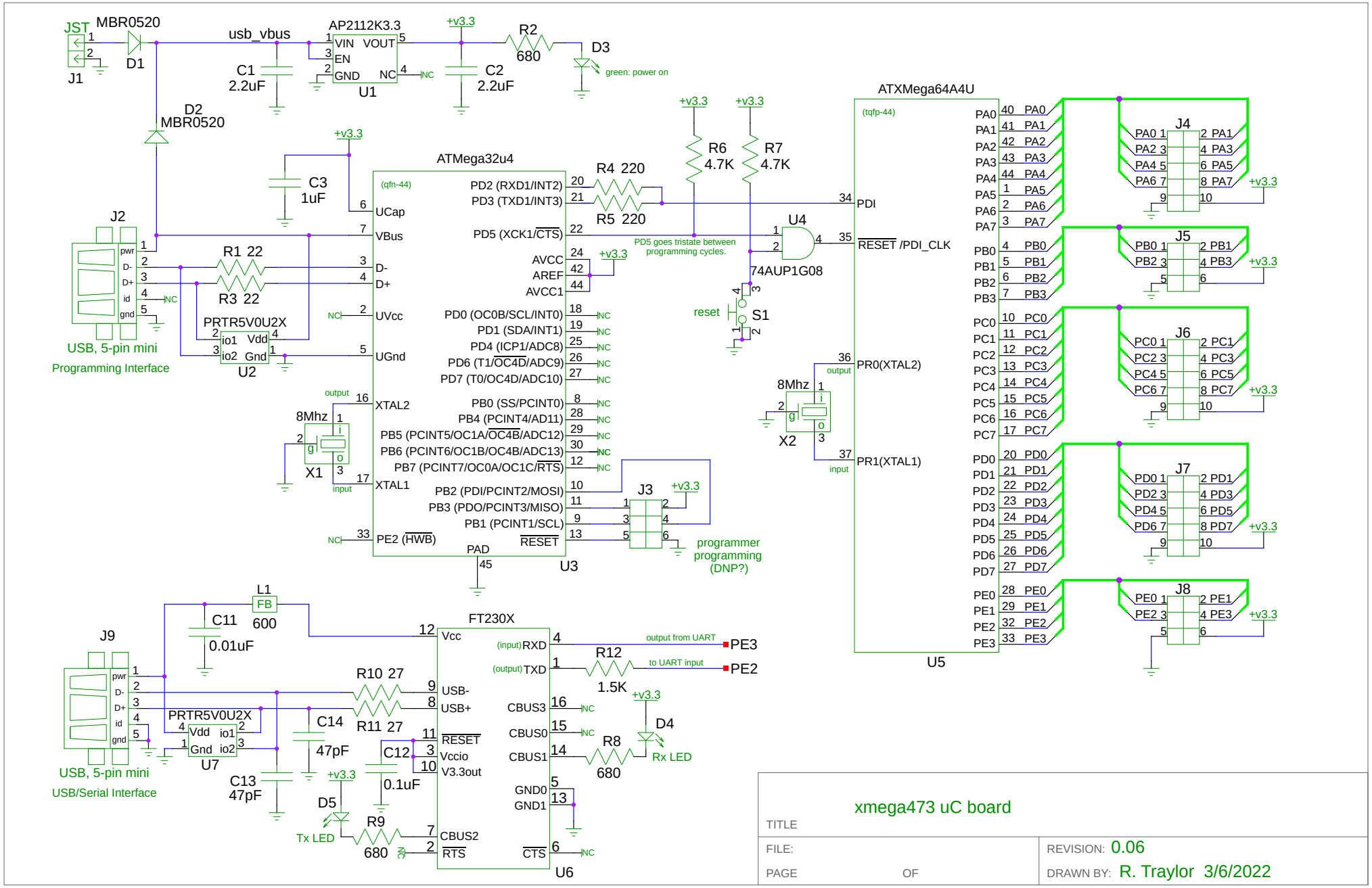
JST
J1
MBR0520
D1
usb_vbus
C1
2.2uF
AP2112K3.3
VIN VOUT
EN
GND NC
U1
+v3.3
C2
2.2uF
R2
680
D3
green: power on
D2
MBR0520
C3
1uF
J2
USB, 5-pin mini
Programming Interface
R1 22
R3 22
PRTR5V0U2X
io1 Vdd
io2 Gnd
U2
ATMega32u4
(qfn-44)
UCap
VBus
D-
D+
UVcc
UGnd
XTAL2
XTAL1
PE2 (HWB)
PAD
U3
8Mhz
X1
R4 220
R5 220
PD2 (RXD1/INT2)
PD3 (TXD1/INT3)
PD5 (XCK1/CTS)
AVCC
AREF
AVCC1
PD0 (OC0B/SCL/INT0)
PD1 (SDA/INT1)
PD4 (ICP1/ADC8)
PD6 (T1/OC4D/ADC9)
PD7 (T0/OC4D/ADC10)
PB0 (SS/PCINT0)
PB4 (PCINT4/AD11)
PB5 (PCINT5/OC1A/OC4B/ADC12)
PB6 (PCINT6/OC1B/OC4B/ADC13)
PB7 (PCINT7/OC0A/OC1C/RTS)
PB2 (PDI/PCINT2/MOSI)
PB3 (PDO/PCINT3/MISO)
PB1 (PCINT1/SCL)
RESET
PD5 goes tristate between programming cycles.
J3
programmer programming (DNP?)
R6
4.7K
R7
4.7K
U4
74AUP1G08
reset
S1
ATXMega64A4U
(tqfp-44)
PDI
RESET /PDI_CLK
PR0(XTAL2)
PR1(XTAL1)
8Mhz
X2
U5
J4
J5
J6
J7
J8
L1
FB
600
C11
0.01uF
J9
USB, 5-pin mini
USB/Serial Interface
PRTR5V0U2X
U7
R10 27
R11 27
C14
47pF
C13
47pF
C12
0.1uF
FT230X
Vcc
USB-
USB+
RESET
Vccio
V3.3out
CBUS2
RTS
RXD
TXD
CBUS3
CBUS0
CBUS1
GND0
GND1
CTS
U6
output from UART
PE3
R12
1.5K
to UART input
PE2
R8
680
D4
Rx LED
D5
Tx LED
R9
680
TITLE
xmega473 uC board
FILE:
PAGE
OF
REVISION: 0.06
DRAWN BY: R. Traylor 3/6/2022