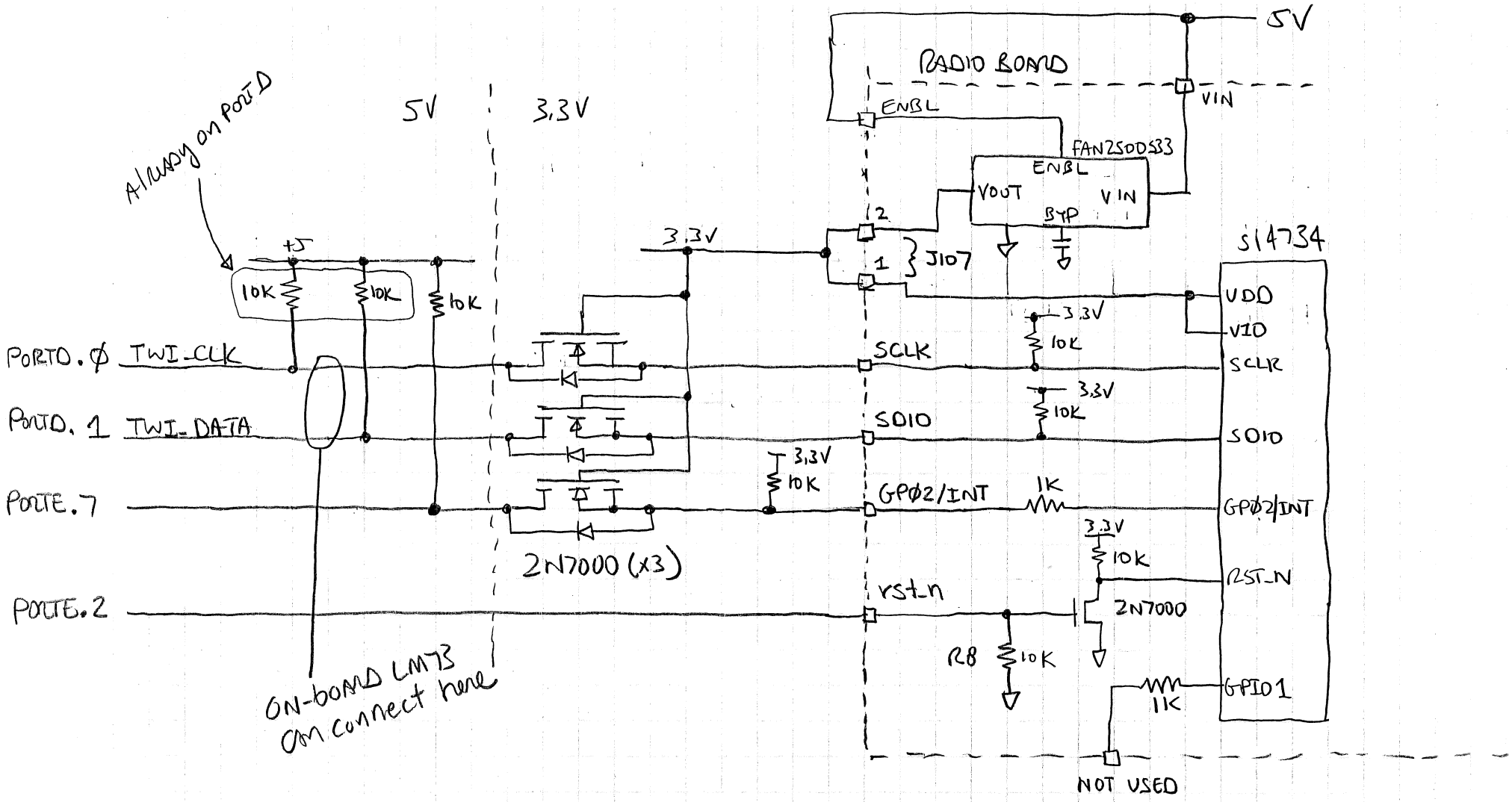
5V
RADIO BOARD
VIN
ENBL
FAN2500S33
ENBL
VOUT
VIN
BYP
2
1
J107
3.3V
S14734
VDD
VIO
SCLK
SCLK
SDIO
SDIO
GPØ2/INT
GPØ2/INT
RST_N
GPIO1
Always on port D
5V
3.3V
+5
10K
10K
10K
PORTD.Ø TWI_CLK
PORTD.1 TWI_DATA
PORTE.7
PORTE.2
2N7000 (x3)
3.3V
10K
3.3V
10K
3.3V
10K
3.3V
10K
1K
3.3V
10K
2N7000
rst_n
R8
10K
1K
NOT USED
ON-board LM73
can connect here